ITECH
YOUR POWER TESTING SOLUTION

IT2600

Multi-channel Cell Simulator & Tester

Precision Cell Simulation · Test · Analysis

Your Power Testing Solution

Cal Power
Via Acquanera, 29 22100 COMO
tel. 031.526.566 (r.a.) fax 031.507.984
info@calpower.it www.calpower.it

YOUR POWER TESTING SOLUTION

IT2600 Multi-channel Cell Simulator & Tester

1U · 8 channels | 0-6 V | ±1 A / ±3 A / ±5 A | 0.1 mV / 10 nA

Balancing Tests
Active and passive

High Resolution
0.1 mV / 10 nA

Built-in Simulation
Faults and ripple

Pack Simulation
Up to 200 channels

Cell Testing
Charge/discharge

Precision Cell Simulation
Cell and model

The IT2600 Series is a high-precision, 1U multi-channel cell simulation and test platform. One unit integrates eight mutually isolated cell channels, each with independently programmable voltage, current and internal resistance. Built-in battery functions include 1st- through 5th-order equivalent-circuit models, an internal-resistance model, battery-curve simulation, fault simulation, and active/passive balancing tests.

Multiple IT2600 units can be connected in series for up to 200 channels and a safe total series voltage of 1200 VDC. The platform supports DC+AC sinusoidal voltage-ripple injection, open-circuit/short-circuit/reverse-polarity fault simulation, an oscilloscope, data logging, list programming, digital I/O, and CAN/LAN/USB interfaces for rapid integration into ATE and HIL systems.

Beyond conventional cell simulation, IT2600 also provides basic cell charge/discharge capabilities, including CV charging, discharging, cycling, capacity and energy calculations, and multiple cutoff conditions. It supports workflows ranging from precision cell simulation and BMS validation to balancing tests, quiescent-current analysis, HIL integration, ATE production testing, and basic cell performance verification.

Product Features

Cell Simulation Capabilities

- Built-in lithium-ion, nickel-metal hydride, nickel-cadmium and other battery models
- 1st- to 5th-order equivalent-circuit models plus internal-resistance model
- User-defined SOC-OCV-RES relationships with CSV import/export
- Voltage accuracy as fine as 1 mV
- Series expansion to a maximum of 200 channels
- Ultra-low output ripple down to 0.5 mVrms
- DC+AC sinusoidal voltage-ripple simulation from 1 to 1000 Hz, up to 100 mVpp
- Optional ITS5800 BMS test system for synchronized cell-voltage, temperature-sensor, insulation, precharge and communication-interaction simulation

Protection and Safety

- OVP, UVP, OCP and OTP protection, plus reverse-polarity indication

Integration and Validation

- Active/passive balancing tests
- Open-circuit, short-circuit and reverse-polarity fault simulation
- Seven fully configurable digital I/O channels
- Oscilloscope: 100 kHz digital processing and 600 kpts memory depth
- Data logger: minimum measurement interval of 20 μs
- List programming with up to 2000 steps
- Free PV2600 control software for centralized multi-channel control and ATE integration
- Standard CAN, LAN and USB interfaces; supports HIL integration
- SCPI, CANopen and Modbus protocol support

Basic Charge/Discharge Testing

- 10nA Current Resolution
- Charge, discharge and charge/discharge cycle tests
- Cutoff conditions based on voltage, current, time, capacity, energy and cycle count
- Use with IT9320 battery test software for advanced data analysis and report generation

High-End Applications and HIL Architecture

HIL System-Level Test Framework

Closed-loop BMS/CMU validation, from individual cell behavior to high-voltage system integration

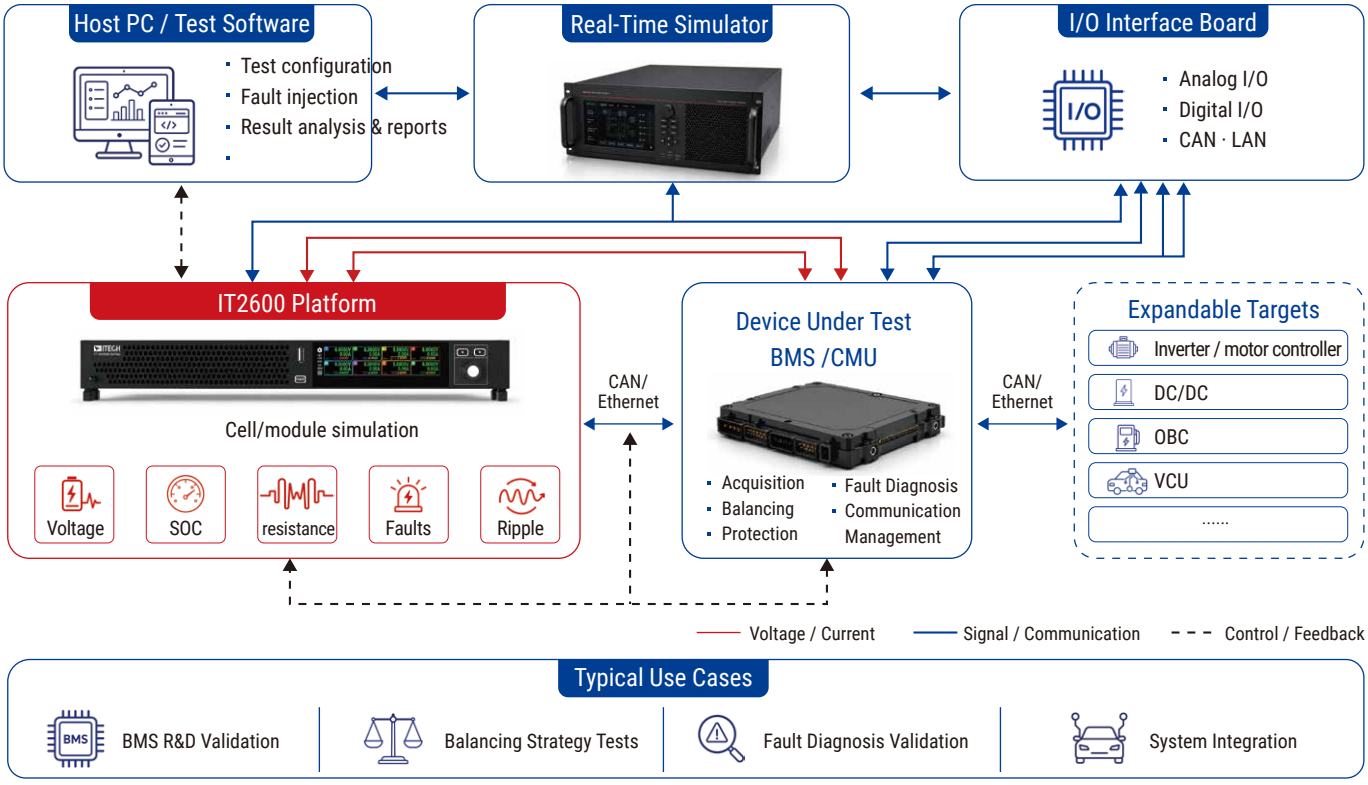

From Precision Measurement to Dynamic Battery Behavior

Precision current measurement · Basic charge/discharge · 1st- to 5th-order models · Dynamic analysis

10 nA Small-Current Readback Resolution

On the 100 μA range, current readback resolution is as fine as 10 nA

The platform captures sleep, standby, leakage and small balancing-current changes while retaining ±1 A, ±3 A or ±5 A bidirectional source/sink capability - from tiny-current observation to ampere-level balancing tests.

- Static-power and sleep-current analysis
- Leakage and abnormal power-consumption troubleshooting
- Active/passive balancing-current observation

Recommended

- BMS/AFE Sleep Current Analysis
- Leakage & Abnormal Power Check
- Balancing Current Monitoring
- Smart Wearables & TWS Devices
- Low-Power Device Validation

From Cell Simulation to Direct Cell Testing

Bidirectional Source · Charge/ Discharge Cycling Test

Each channel supports bidirectional operation for charging, discharging and cycle tests. Cutoff conditions can be set by voltage, current, time, capacity, energy or cycle count, with built-in capacity and energy calculations.

- Basic performance verification for small-capacity cells
- Capacity and energy calculations
- Multi-condition cutoff and cycling

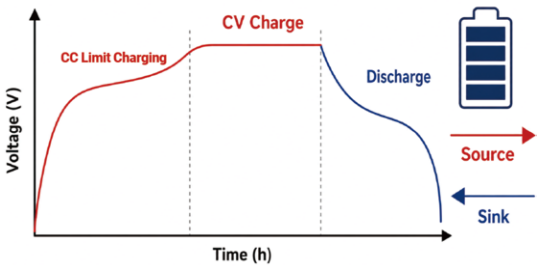

1st- to 5th-Order Battery Models

Rint Model · 1st- to 5th-Order RC Equivalent Circuits · CSV Import

Define SOC-OCV-RES relationships so that output voltage changes in real time with SOC, load current and dynamic operating conditions. The models reproduce polarization, dynamic recovery and different internal-resistance states.

- SOC estimation
- Dynamic-voltage prediction
- Protection-threshold verification

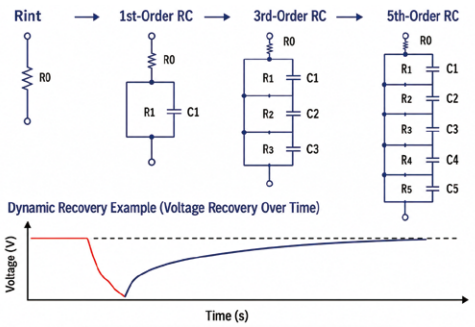

Oscilloscope for Transients, Data Logging for the Full Process

100 kHz Oscilloscope · 600 kpts Memory · Minimum 20 μs Logging Interval

Observe channel voltage and current simultaneously to capture balancing transitions, ripple and fault transients. Continuous recording of charge/dis-charge and balancing processes supports trend analysis, fault reproduction, data export and test reporting.

- Transient Waveform Capture
- Long-Term Trend Analysis
- Data Export & Fault Reproduction

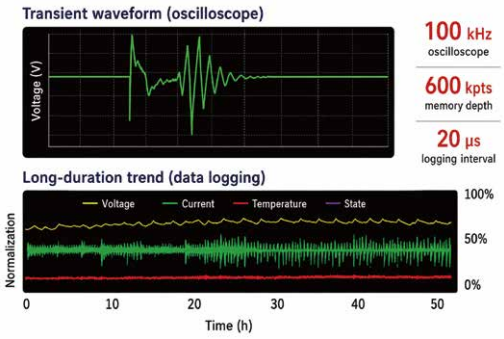

Voltage Ripple Simulation

Cell-level controlled sinusoidal ripple from 1 to 1000 Hz, up to 100 mVpp, with DC+AC output

Ripple simulation superimposes a controlled AC signal - typically sinusoidal - on the simulator's DC cell-voltage output. This reproduces ripple generated in real battery systems by inverters, DC/DC converters and other power-electronic devices.The primary objective is to verify the ability of the BMS front-end filter - including RC filtering and digital filtering algorithms - to reject ripple interference. This helps ensure accurate cell-voltage sampling under high-ripple conditions and reduces the risk of SOC estimation errors, false contactor actions and other safety-related responses.

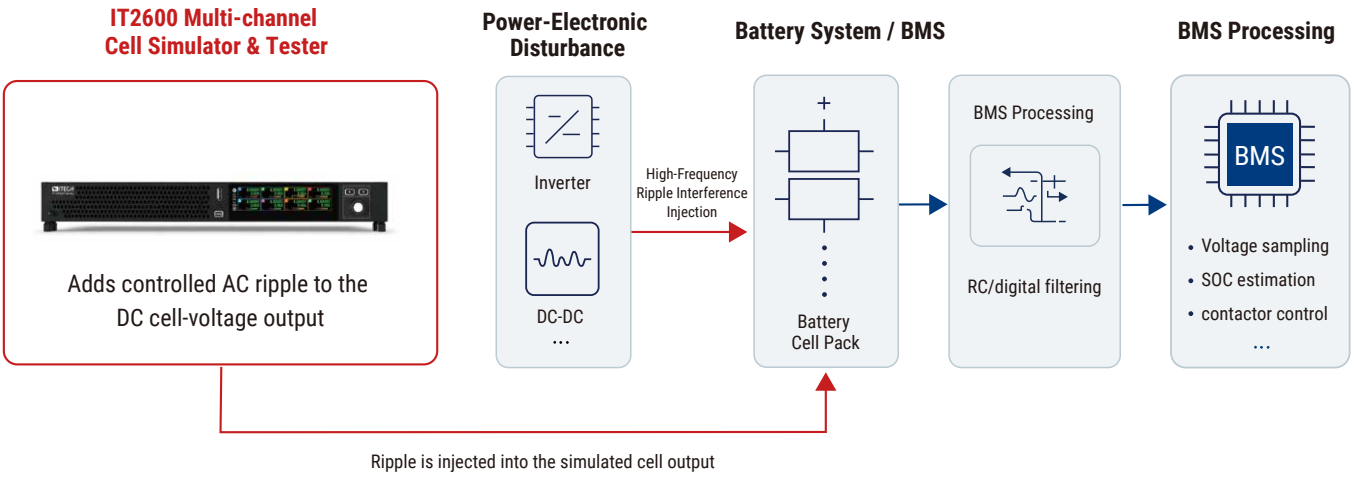

Test Item	Conventional Cell Simulator	Recommended Platform (IT2600)
Simulate cell voltage	✓ Supported	✓ 0.1 mV voltage resolution
Precise current setting and readback	✕ Typically μA-level	✓ 10 nA readback resolution
BMS sleep-current testing	✕	✓ 10 nA readback resolution on the 100 μA range
Ripple disturbance from inverter/DC-DC	✕	✓ Built-in ripple simulation
Dynamic internal resistance vs. SOC/temperature	✕	✓ Programmable internal resistance
Charge/discharge cycling	✕	✓ Built-in charge/discharge tests
Fault injection: open/short/reverse polarity	△ Partial support or external hardware	✓ Built-in fault simulation
Data logging / oscilloscope	✕	✓ Built-in 100 kHz oscilloscope
SOC curve simulation	△ Partial support	✓ 1st- to 5th-order battery models
Multi-channel synchronized control	✕	✓ Up to 200 channels with cascaded multi-unit synchronization
CANopen and Modbus	△ Partial support	✓ Built-in protocol support

From Coordinated Instruments to Comprehensive BMS Testing

Unified voltage, temperature and insulation control · Composite scenario sequencing · System-level automated validation

One Software Platform, Three Test-Resource Categories

Free PV2600 software · Centralized management of up to 200 channels · Multi-device scenario sequencing

PV2600 centrally displays channel status and batch-configures voltage, SOC, internal resistance and battery models. Through unified test sequences, it coordinates IT2600, IT5241 and IT5240 so voltage, temperature and insulation conditions can change together, making complex BMS scenarios easier to configure, execute and reproduce.

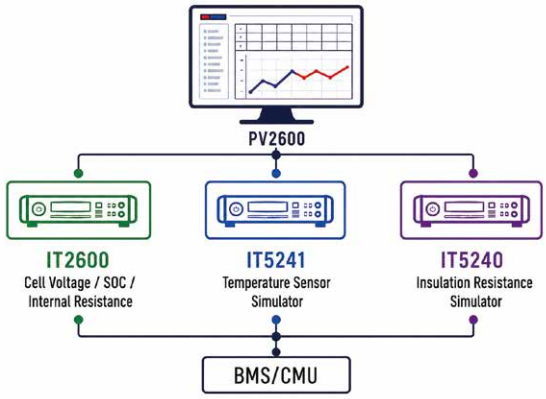

- Centralized status display and batch settings for up to 200 channels
- Unified sequencing across multiple instruments
- Coordinated voltage, temperature and insulation changes

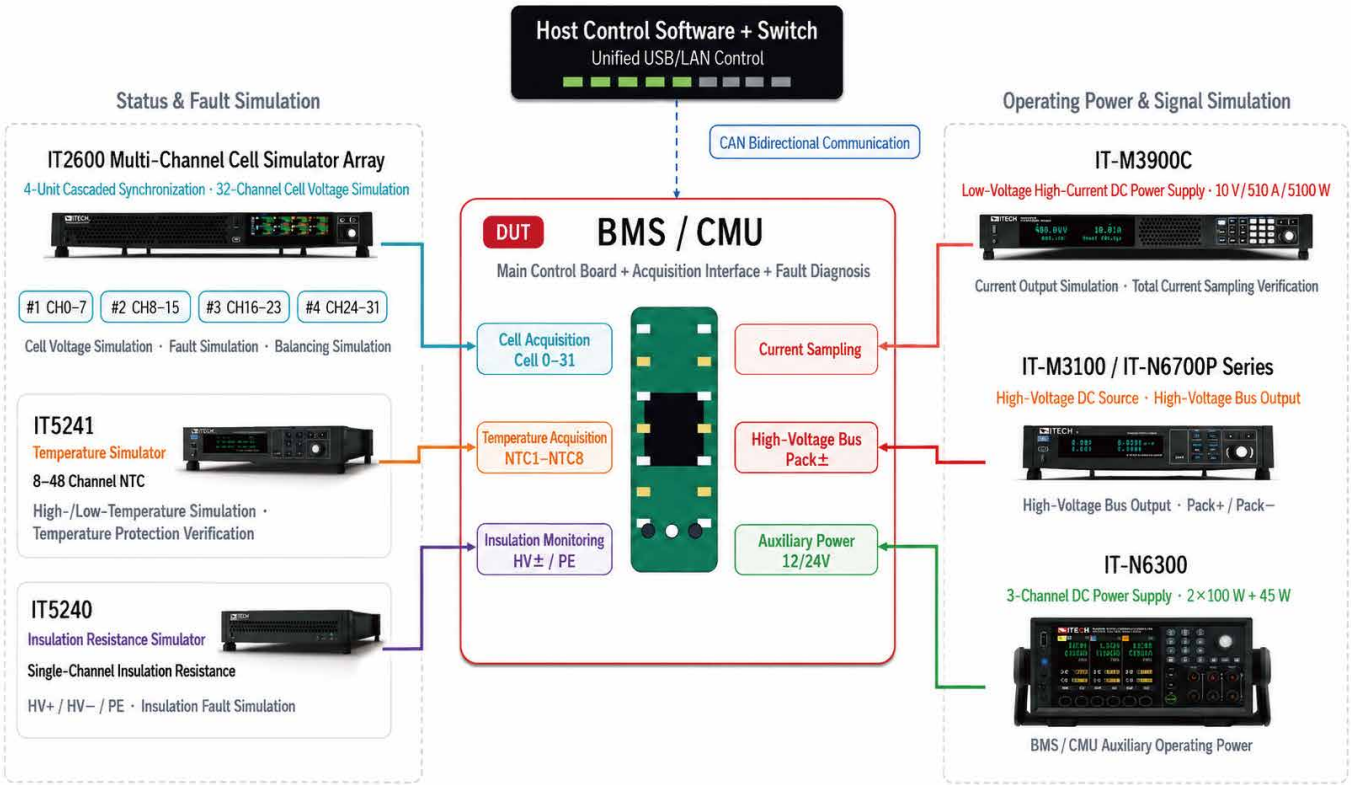

Complete Test-Scenario Coverage

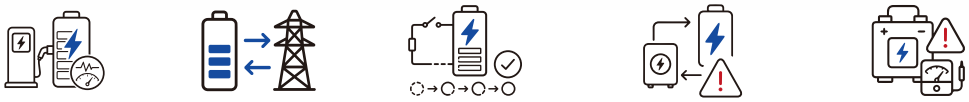

Fast-Charge Conditions · Energy Regeneration · Precharge Process · Auxiliary-Power Anomalies · Combined Fault Injection

ITS5800 System Expansion. The comprehensive BMS test system further integrates cell voltage, temperature sensors, insulation status, precharge and contactors, HVIL, analog/digital I/O, and communication interactions. It covers core BMS test items and provides a complete architecture for comprehensive BMS validation.

		IT2606-06-01		IT2618-06-03		IT2630-06-05	
Rated range	Voltage	0～6V		0～6V		0～6V	
	Current	0～±1A		0～±3A		0～±5A	
	Power	0～6W		0～18W		0～30W	
	Internal resistance	0～1Ω		0～1Ω		0～1Ω	
Line regulation ±(%of Output+Offset)	Voltage	≤0.01%F.S.+0.1mV		≤0.01%F.S.+0.1mV		≤0.01%F.S.+0.1mV	
	Current	≤0.01%F.S.+200uA		≤0.01%F.S.+200uA		≤0.01%F.S.+200uA	
Load regulation ±(%of Output+Offset)	Voltage	≤0.01%F.S.+1mV		≤0.01%F.S.+1mV		≤0.01%F.S.+1mV	
	Current	≤0.01%F.S.+200uA		≤0.01%F.S.+200uA		≤0.01%F.S.+200uA	
Setting resolution	Voltage	6V range	0.1mV	6V range	0.1mV	6V range	0.1mV
	Current	1A range	0.1mA	3A range	0.1mA	5A range	0.1mA
	Internal resistance	6V range	1mΩ	6V range	1mΩ	6V range	1mΩ
Readback resolution	Voltage	6V range	0.1mV	6V range	0.1mV	6V range	0.1mV
	Current	1A range	0.1mA	3A range	0.1mA	5A range	0.1mA
		100mA range	10uA	100mA range	10uA	100mA range	10uA
		100uA range	10nA	100uA range	10nA	100uA range	10nA
Setting accuracy	Voltage	6V range	≤0.01% + 0.01%F.S.	6V range	≤0.01% + 0.01%F.S.	6V range	≤0.01% + 0.01%F.S.
	Current	1A range	≤0.05% + 0.05%F.S.	3A range	≤0.05% + 0.05%F.S.	5A range	≤0.05% + 0.05%F.S.
	Internal resistance	6V range	≤0.1% + 0.2%F.S.	6V range	≤0.1% + 0.2%F.S.	6V range	≤0.1% + 0.2%F.S.
Readback accuracy	Voltage	6V range	≤0.01% + 0.01%F.S.				
	Current	1A range	≤0.05% + 0.05%F.S.	3A range	≤0.05% + 0.05%F.S.	5A range	≤0.05% + 0.05%F.S.
		100mA range	≤0.05% + 0.05%F.S.	100mA range	≤0.05% + 0.05%F.S.	100mA range	≤0.05% + 0.05%F.S.
		100μA range	≤0.05% + 0.05%F.S.	100μA range	≤0.05% + 0.05%F.S.	100μA range	≤0.05% + 0.05%F.S.
Rise time - No load	Voltage	≤40us		≤40us		≤40us	
Rise time - Full load	Voltage	≤40us		≤40us		≤40us	
Fall time - No load	Voltage	≤40us		≤40us		≤40us	
Fall time - Full load	Voltage	≤40us		≤40us		≤40us	
Ripple（20 Hz-10 MHz）	Voltage RMS	≤0.5mV					
Readback temperature coefficient (%of Output+Offset)/°C	Voltage	⩽20PPM/°C					
	Current	≤20PPM/°C					
Dynamic response 50%-100%load change	Voltage	≤30us		≤40us		≤50us	
AC input	Voltage	100V～240V					
	Frequency	50/60Hz					
Remote-sense compensation voltage		≤1V					
Programming response time		1ms		1ms		1ms	
Power factor		0.95		0.95		0.95	
Maximum input current		2.5A		4A		5.5A	
Maximum input apparent power		250VA		400VA		550VA	
Protection		OVP/OCP/OTP/UVP/SENSE					
Withstand voltage - Output to earth		1200VDC					
Withstand voltage - Between channels		500VDC					
Withstand voltage - Input to earth		2100VDC					
Withstand voltage - Input to output		4200VDC					
Safety standard		IEC 61010					
Bare-unit dimensions		600mm*437mm*43.5mm					
Net weight		（11±0.5） kg					

This information is subject to change without notice.For more information, please contact ITECH.

Taipei

Add: No.918, Zhongzheng Rd., Zhonghe Dist., New Taipei City 235, Taiwan
Web: www.itechate.com
TEL: +886-3-6684333
E-mail: info@itechate.com

ITECH Web

ITECH Facebook

Cal Power

Via Acquanera, 29 22100 COMO
tel. 031.526.566 (r.a.) fax 031.507.984
info@calpower.it www.calpower.it