FOTRIC Handheld Acoutherm Imaging Camera Series

Quick Start Manual

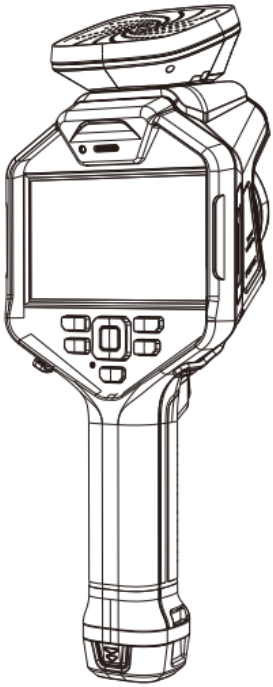

Cal Power

Via Acquanera, 29 22100 COMO
tel. 031.526.566 (r.a.) fax 031.507.984
info@calpower.it www.calpower.it

FOTRIC

CONNECTING THE DIGITAL FUTURE

Symbols

For symbols that appear in the document, the description is shown below.

⚠ Warning	⚠ Caution
Potential death or serious injury inducing hazards	Potential danger of injury or property damage

Safety Information

The purpose of this content is to ensure that the user uses this product properly to avoid danger or property damage.

Before using this product, please read this instruction manual carefully and keep it in a safe place for future reference.

⚠ Warning

- Do not disassemble or modify the battery of this product. The battery is equipped with safety and protective devices which, if tampered with, may cause the battery to overheat and may also result in explosion or combustion. If the battery leaks and the leak gets into your eyes do not rub it, wash it with water and go to the hospital immediately.
- When using the laser pointer, do not look at the laser beam directly with the human eye. The laser beam can cause eye irritation.
- If the product is not working properly, contact your dealer or our company and do not disassemble or modify product in any way (unauthorized modifications or repairs cause problems at your own risk).

⚠ Caution

- Avoid using the product in humid, dusty, extremely hot or cold environments, see the product data sheet for specific temperature and humidity requirements.
- Do not touch the sensor or lens part directly to avoid staining and damage by oil and various chemicals, if necessary, please moisten a clean cloth slightly and gently wipe off the dust. When the product is not in use, close the lens cap.
- When the product is turned on, a warm-up process of approximately 5-10 minutes may be required before accurate temperature data can be read.
- Avoid focusing or prolonged observation on the sun or objects with extremely high temperatures, as this may result in reduced sensor life damage or temporary black spots (minor cases can be recovered after calibrating the NUC, severe cases can result in permanent and irreversible damage to the detector).

- Avoid damage to the infrared sensor caused by over-range exposure.
- Take extra caution to keep the acoustic array from strains, dust, and liquids that could compromise the performance of the product or even cause permanent damage.
- It is strongly recommended to use the original power adapter, the specific requirements of the power adapter are shown in the product parameter table.
- To prevent the potential danger of data loss, always copy (back up) your data to your computer.
- When storing the product, it is strongly recommended to use the original box and place it in a cool, dry, ventilated environment free from strong electromagnetic fields.
- When shipping the product, it is highly recommended that it be shipped protected in its factory packaging.

Contents

Acoutherm Imaging Camera 1
Interface Introduction 6
Quick Start 15
Maintenance Instructions 16
Appendix 17
About This Manual 19
How to Contact FOTRIC 21

Acoutherm Imaging Camera

Front View

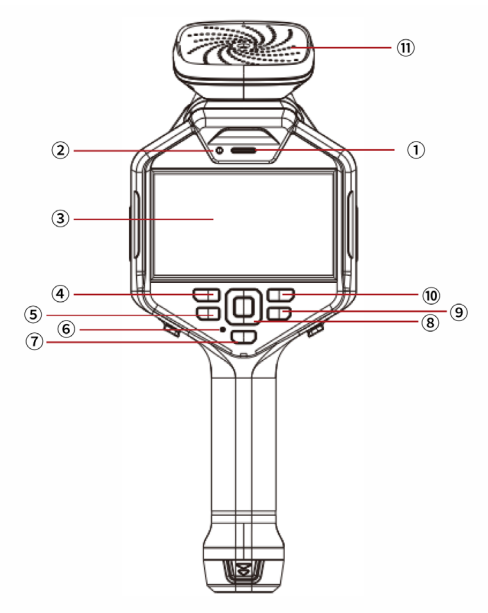

① Speaker

② Status Light

③ 5” LCD Screen

④ Power Button

⑤ LED Button

⑥ Microphone

⑦ AI Button

⑧ Confirm Key and Arrow Keys

⑨ Back Button

⑩ Gallery Button

⑪ Acoustic Imaging Module

Rear View

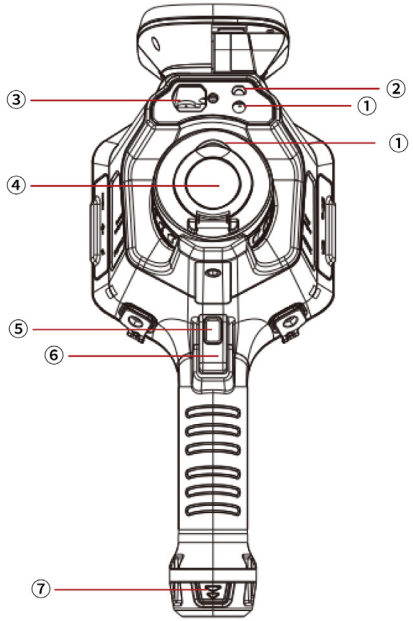

① Digital Camera

② LED Flash Light

③ Laser Ranger

④ Lens Cap

⑤ Autofocus Button

⑥ Freeze Image and Snapshot Button

⑦ Battery

Left View

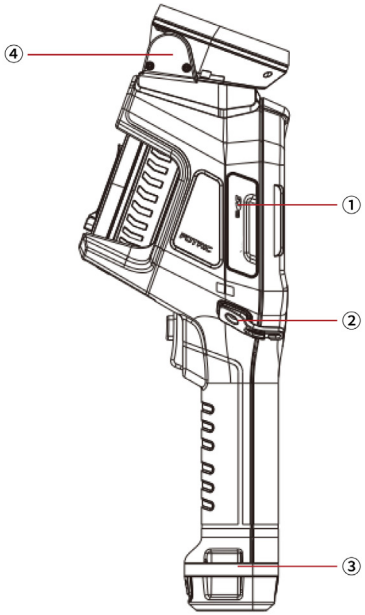

① SD card Socket

② Wrist Strap Bracket Fixing Point

③ Wrist Strap

④ Acoustic Module

Right View

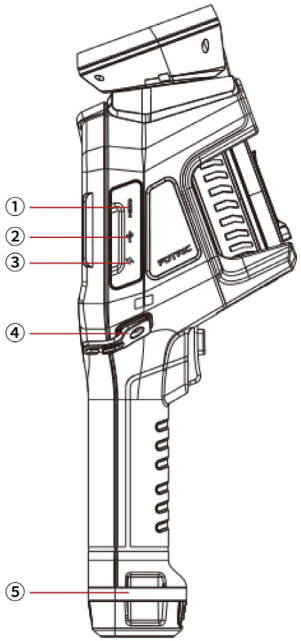

① Micro-HDMI Interface

② USB Type-C Interface

③ Power Supply Interface

④ Wrist Strap Bracket Fixing Point

⑤ Wrist Strap

Top View

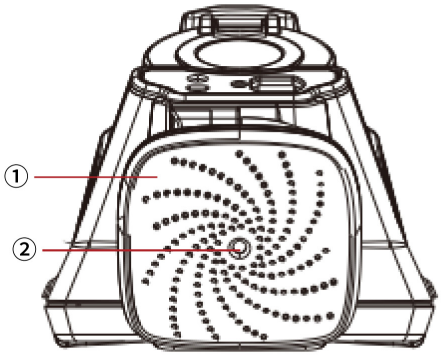

① Microphone Array

② Digital Camera

Interface Introduction

Main Interface

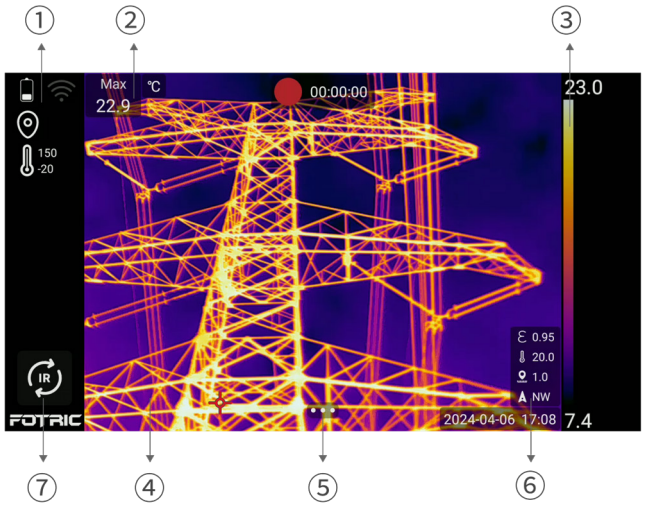

① Display battery, Wi-Fi, bluetooth, GPS, SD card capacity low, laser warning , compass, time, logo and other reminder icons.

② Displays values for global and regional temperature, emissivity, area, and length, as well as units.

③ Displays values such as palette color band and upper and lower temperature scale limits.

④ Displays the real-time thermal/acoustic image screen, tem-

perature measurement markers, target distance and other values.

⑤ Enter the system menu.

⑥ Displays emissivity, reflected temperature, ambient temperature, relative humidity, target distance and other measurements.

⑦ Switch among IR, AC and MiX mode.

IR Mode Interface

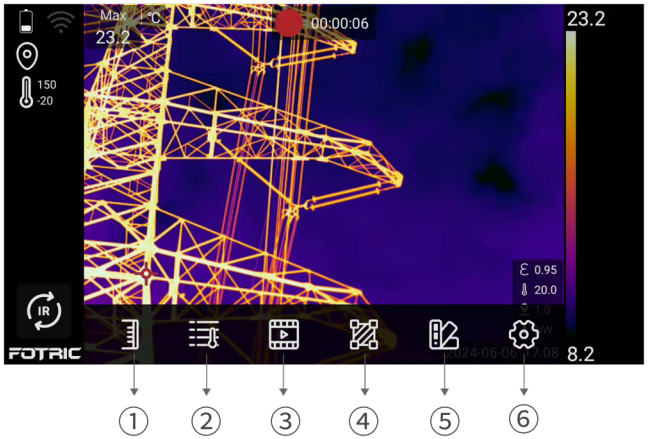

① Select among automatic temperature span, manual temperature span, touch temperature span setting.

② Adjust emissivity, reflection temperature, ambient temperature, relative humidity, target distance, infrared window compensation factors.

③ Switch between thermal image, digital camera, picture-in-picture, and image blend mode.

④ Apply ROIs such as spot, rectangle, circle, line. Calculate temperature rise among ROIs or against a specific temperature value.

⑤ Apply various color palettes and inverse palettes, including color alarms (isotherms).

⑥ Change settings about capture mode, network connection, temperature measurement range, storage and save options, device settings, etc.

AC Mode Interface

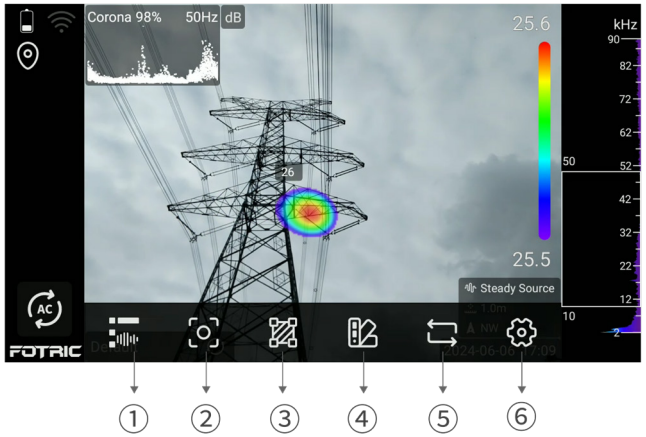

① Include signal source mode (single, multi, and hologram mode) and T-FFTD® signal delay option .

② Turns the acoustic focus on or off.

③ Add spot , circle and apply distance parameter.

④ Palette Selection.

⑤ PD Mode (partial discharge), LQ mode (leak) , and LQ eval mode(leak evaluation) settings.

⑥ Access capture mode, connection, storage & save Options, device set, plug-in manager, etc.

MiX Mode Interface

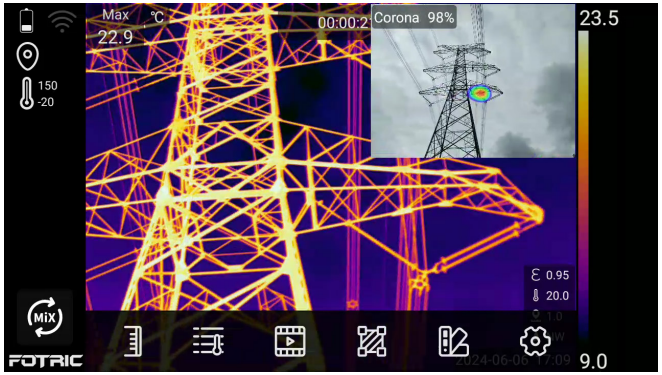

The MiX mode share the same system menu with the IR mode.

Gallery

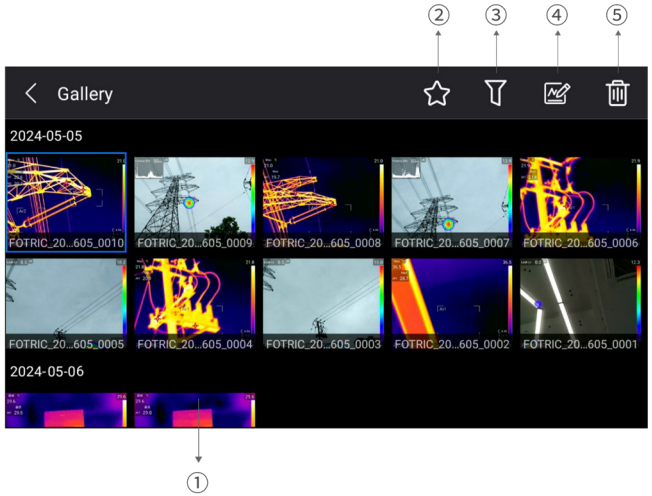

① Display the captured photos and videos. Short click to select, long press to multi-select.

② Display only images with the favorite toggle activated.

③ Filtering by tags attached to the images.

④ Enter the analysis mode to analyze the captured pictures and video files.

⑤ Delete the selected file.

System Settings

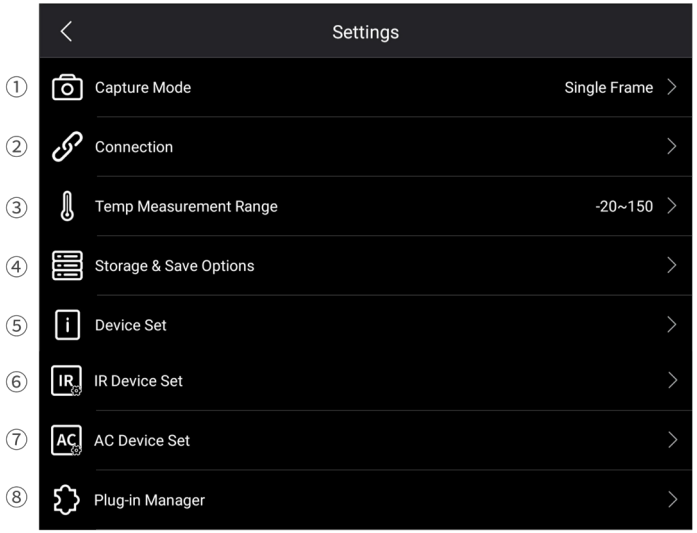

① Switch between single-frame capture, recording, and time-lapse mode.

② WLAN, portable hotspot, bluetooth and FTP transfer.

③ Switch among 3 different temperature ranges, can also enable intelligent range.

④ Super resolution, video compression format, saving visible light image as separate JPEG photos, saving measurement settings such as distance, and deletion of all saved files.

⑤ Device set: Language time and region setting, USB mode, display setting, geographic location, LED as flash, volume, reset, device information, etc.

⑥ Focus type, TWB, IREdge, image overlay information, T-DEF transparency, and manual adjustment mode.

⑦ Leak evaluation parameters, acoustic image focus range, frequency configuration, display dB value, AC frequency, SPL normalization, measurement enhancement and other settings.

⑧ Plug-ins for business and services, etc.

Quick Start

Please follow the steps below:

1. Make sure the battery is fully charged.
2. Place the battery in the camera's battery compartment.
3. Insert the SD card into the corresponding slot.
4. Long press the power button to turn on the device.
5. Select IR, AC or MiX mode.
6. Aim the camera at the target object.
7. Press the snapshot button once to freeze the image, and the user may conduct analysis and adjustment on the image.
8. Press the snapshot button again to save the image.
9. Download the respective FOTRIC software at 'https://www.fotric.com/support'.
10. Transfer the images from the camera to PC, import them into the software for furtherf analysis and report generation.

⚠ Caution

When using the IR mode, it is important to adjust the focus correctly. Incorrect focus adjustment may affect image clarity and measurement accuracy of this product.

Maintenance Instructions

- Temperature measuring equipment is recommended for temperature calibration measurement once every one to two years.
- Pay attention to keep the lens clean, use a soft non-woven cloth to gently wipe and brush away dust, or use an oilfree cotton cloth dipped in 96% concentration of ethanol, wring it out and wipe it gently, avoid wiping it hard to cause permanent damage to the lens.
- Please ensure that the battery is fully charged when storing for a long time.

Appendix

Emissivity Table

（For reference only）

Material Name	Surface Condition	Temperature (°C)	Emissivity (ε)
Aluminum	Non-oxidized	100	0.2
	Oxidized	100	0.55
	Polished brown	20	0.4
Brass	Unpolished	38	0.22
	Oxidized	100	0.61
Copper	Severely oxidized	20	0.78
Iron	Oxidized	100	0.74
	Rusty	25	0.65
Cast iron	Oxidized	200	0.64
	Non-oxidized	100	0.21
Wrought iron	Roughened	25	0.94
	Polished	38	0.28
Nickel	Oxidized	200	0.37
Stainless steel	Oxidized	60	0.85
Steel	Oxidized at 800°C	200	0.79
Common brick	Surface	20	0.93
Concrete	Surface	20	0.92
Glass	Polished plate	20	0.94
Lacquer	White	100	0.92
	Natural color black	100	0.97
Carbon	Smoke black	25	0.95
	Candle soot	20	0.95
	Graphite rough surface	20	0.98
Paint	Average of 16 colors	100	0.94
Paper	White	20	0.93
Sand	Surface	20	0.9
Wood	Polished	20	0.9
Water	Distilled water	20	0.96
Skin	Human	32	0.98
Pottery	Fine	21	0.9
	Abrasive	21	0.93

About This Manual

This manual is intended to be used as a guide. The photographs, graphics, icons and illustrations provided in this manual are for explanatory and illustrative purposes only and may differ from the specific product, so please refer to the actual product. Due to product version upgrade or other needs, FOTRIC may update this manual without prior notice.

Trademarks and images used in this brochure are for illustrative purposes only and are copyrighted by the trademark owner.

Disclaimers

The products (hardware, software, etc.) provided in this manual may contain defects, errors, or failures, and FOTRIC makes no warranties of any kind, either express or implied, including, but not limited to, warranties of merchantability, satisfaction of quality, fitness for a particular purpose, and non-infringement of third-party rights, etc. FOTRIC shall not be liable for any special, incidental, occasional, or consequential damages resulting from the use of this manual or our products, including, but not limited to, damages resulting from loss of business profits, loss of data, or loss of documentation. This includes, but is not limited to, damages resulting from loss of business profits, loss of data or documentation.

To the fullest extent permitted by law, our liability will not exceed the amount you paid for the Product.

After the product is connected to the Internet, it may face risks including but not limited to network attacks, hacker attacks, virus infections, etc. For the problems caused by the product working abnormally, information leakage, etc., the Company is not responsible, but will provide you with technical support in a timely manner.

The products can sense motion detection and fire events when properly installed and configured, but cannot prevent accidents or resulting personal injury or property damage.

Thermal imaging products are classified as export controlled by the United Nations Security Council (UNSC), the United States, and the European Union (EU), as well as national export regulations of their own country and/or region.

Countries subject to sanctions, embargoes, or prohibitions include Belarus, Burundi, Balkan-related sanctions (such as former Yugoslavia, some sanctions in Kosovo, Bosnia and Herzegovina), Cuba, Central Africa, Congo (Brazzaville), Iran, Iraq, Lebanon, Libya, North Korea, Russia, Syria, Sudan, South Sudan, Somalia, Venezuela, Yemen, Zimbabwe, and any other countries that may be designated from time to time.You will be responsible for any loss or liability arising from the above actions.

In using this product, you are requested to strictly comply with applicable laws. You agree that this product is for civilian use only.

In the event of a conflict between the above and the applicable law, the provisions of the law shall prevail.

How to Contact FOTRIC

If you need to contact FOTRIC, please address the following

info@fotric.com
www.fotric.com

Warranty Card

Thank you for choosing FOTRIC acoutherm imaging camera.We design products to deliver long-lasting performance under our warranty policy (starting from date of original purchase).If any manufacturing defects appear under normal use, the product will be repaired or replaced by FOTRIC INC.with no cost to the owner.

Certificate of QC

This is to certify that the acoutherm imaging camera listed on this card meets the requirements of FOTRIC quality control procedures.

FOTRIC technical standards are formulated following the international standards for the industrial testing infrared thermal imager and the relevant standards cited therein, as listed below:

IEC 60529:1989+A1:1999+A2:2013 Enclosure protection grade (IP 54)

IEC 60068-2-27:2008 Environmental test (Shock)

IEC 60068-2-6:2007 Environmental test for electrical and electronic products (Vibration)

EN 61010-1:2010/A1:2019 Safety requirements for electrical equipment for measurement, control, and laboratory use

EN IEC 61326-1:2021 Electrical equipment for measurement, control, and laboratory use - EMC requirements - Part 1: General requirements

FCC 47 CFR Part 15 RADIO FREQUENCY DEVICES

EN 60825-1:2014/A11:2021 Safety of Class 2 laser products - Part 1: Equipment classification and requirements

Innovation
Excellence
Integrity

Company Disclaimer
Equipment described herein may require EU, US and UNSC authorization for export purposes.
Imagery for illustration purposes only.
Specifications are subject to change without notice.
FOTRIC INC. © 2024 All Rights reserved.

FOTRIC INC.

Cal Power

Via Acquanera, 29 22100 COMO
tel. 031.526.566 (r.a.) fax 031.507.984
info@calpower.it www.calpower.it