Quick Start Manual

FOTRIC 320 Series

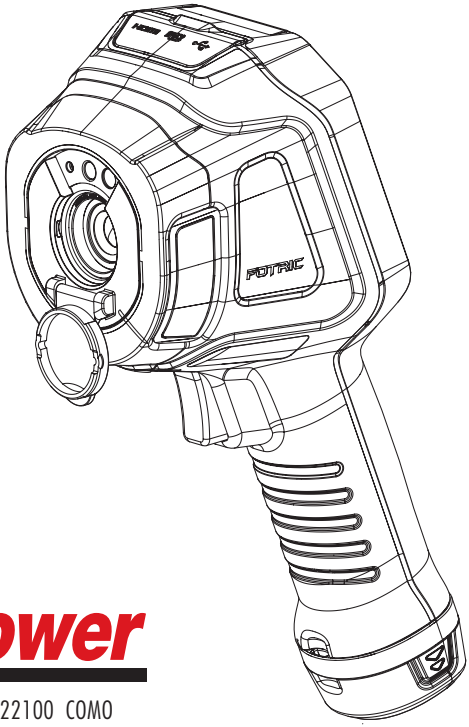

Cal Power

Via Acquanera, 29 22100 COMO
tel. 031.526.566 (r.a.) fax 031.507.984
info@calpower.it www.calpower.it

FOTRIC

CONNECTING THE DIGITAL FUTURE

Contents

Legal Disclaimer 1
Safety Information 5
Thermal Imager 8
Laser Pointer. 12
Acessories. 13
Interface Introduction 14
Quick-Start 20
Tips 22
Specificions. 24
Documents 27
Appendix A 28
Appendix B 30

1.1 Legal Disclaimer

Uncooled thermal imager manufactured by FOTRIC are entitled to 1 to 2 years warranty service (depending on the specific model) from the date of initial purchase and delivery. Warranty covers defects caused by materials and production processes, provided that such products are handled under normal storage, use, and repair conditions and in accordance with FOTRIC instructions.

Products not manufactured by FOTRIC but included in the system that FOTRIC sells to the original purchaser are covered by the specific supplier's warranty terms (if any) and FOTRIC is not liable for those products. This warranty is provided to the original purchaser and is not transferable. This warranty does not apply to any product that has been damaged by misuse, neglect, accident, or abnormal operating conditions. Consumable parts are not covered by this warranty.

Any defects in the products covered by this warranty must be reported and the product must not be used after, to prevent further damage. The purchaser must report any defects to FOTRIC immediately, otherwise this warranty will not apply.

If the product is proven defective in relation to materials or manufacturing after FOTRIC's inspection, it is up to the user whether it is to be repaired or replaced (refer to FOTRIC warranty policy), provided that the product must be returned to FOTRIC within 3 Months from above

mentioned report date. FOTRIC has no obligation or liability for any defects other than those mentioned above. This product is exempt from any other warranties, expressed or implied. FOTRIC hereby disclaims any implied warranties of merchantability and applicability for a particular purpose. FOTRIC is not responsible for any direct, indirect, special, incidental or consequential loss or damage based on contract, civil, or any other legal theory. This warranty clause shall apply the relevant provisions of the laws of the People's Republic of China. Any dispute or claim arising out of or relate to this warranty shall be finally settled through arbitration in accordance with the rules of the Shanghai Pudong New District People's Court of the People's Republic of China. The place of arbitration shall be Shanghai.

1.2 Usage Statistics

FOTRIC reserves the right to collect anonymous usage statistics to help maintain and improve the quality of the products and services provided.

1.3 Copyright

No parts of this software (including source code) may be reproduced, transmitted, transcribed, or translated into any kind of language or computer language in any form or by electronic, electromagnetic, optical, manual ways, or any other means without the prior written permission of FOTRIC.

No parts of this document may be reproduced, photocopied, reprinted, translated, or transmitted to any readable electronic medium or machine without the prior written consent of FOTRIC.

The names and logos shown on the products herein are either registered trademarks or trademarks of FOTRIC and/or its affiliates. All other trademarks, trade names or company names referenced herein are for identification purposes only and are the property of respective owners.

1.4 Quality Assurance

The quality management system for the development and production of these products in FOTRIC has been certified in accordance with the ISO 9001 standard.

FOTRIC is committed to a policy of continuous development, as we reserve the right to modify or upgrade any product without prior notice.

1.5 Export Control

Thermal imaging products are listed as export-controlled products by U.S. Department of Commerce, United Nations Security Council (UNSC), and European Union (EU). This product contains a focal plane array and cannot be used in controlled countries (such as North Korea, Iran, Syria, Cuba, Sudan, Russia, etc.). Please do not bring this product into or used in controlled countries. Any loss or liability arising from the above actions will be borne by the purchaser.

Safety Information

This product complies with the restrictions for Class A digital equipment in Chapter 15 of the FCC Rules. These restrictions are designed to prevent harmful interference to civilian installations. If not installed and used in strict accordance with the instructions , this device will generate, use and emit radio frequency energy, which may cause harmful interference to radio communications.

Definition

⚠ Warning> Represents a hazardous situation or behavior that could result in personal injury or death.

⚠ Caution > Represents conditions or actions that could result in damage to the device or permanent loss of data.

⚠ Notice> Represents useful information for users.

Please read before using:

⚠ **Warning >** This is class A product. In a domestic environment, this product may cause radio interference in which cause the user may be required to take adequate measures.

⚠ **Warning >** Do not disassemble or do modifications to the battery of the thermal imager . The battery contains safety and protection devices, which, if damage occurs, can cause the battery to become hot, or cause an explosion or an ignition. If there is a leak from the battery and you get the

fluid in your eyes, do not rub your eyes. Flush well with water and immediately get medical care. The battery fluid can cause injury to your eyes if you do not do this.

⚠ **Warning >** The thermal imager is equipped with a laser pointer. Do not look directly into the laser beam. The laser beam can cause eye irritation.

⚠ **Caution>** The thermal imager uses a very sensitive thermal sensor, so do not point the infrared camera (with or without the lens cover) at strong energy sources, for example, devices that cause laser radiation, or the sun. This can have an unwanted effect on the accuracy of the camera. It can also cause damage to the detector in the camera which is not covered in Fotric's warranty.

⚠ **Caution>** Original packing box must be used during transportation.Please do not strongly hit the thermal imager during use and transportation.

⚠ **Caution >** When storing the thermal imager, it is recommended to use the original packing box and place it in a cool and dry place, away from strong electromagnetic field.

⚠ **Caution>** Please avoid oil and various chemical substances to contaminate or damage the surface of the lens. Please cover the lens with cap when not use.

⚠ **Caution>** Do not use the camera in temperatures higher than +50° C (+122° F), unless other information is specified in the user documentation or technical data. High temperatures can cause damage to the camera.

⚠ **Caution>** In order to prevent potential risk of data loss, please copy (back up) the data to a computer or server

periodically.

⚠ **Caution >** Please do not open the thermal imager' s shell or modify it without permission. Repair services can only be performed by authorized FOTRIC personnel.

⚠ **Notice>** After the thermal imager is turned on, it may take about 10~15 minutes to warm up before accurate measurement.

⚠ **Notice>** Every thermal imager's temperature correction has been performed before delivered from factory.

⚠ **Warning >** This device complies with Part 15 of the FCC Rules. Operation is subject to the following two conditions: (1) this device may not cause harmful interference, and (2) this device must accept any interference received, including interference that may cause undesired operation.

Front View

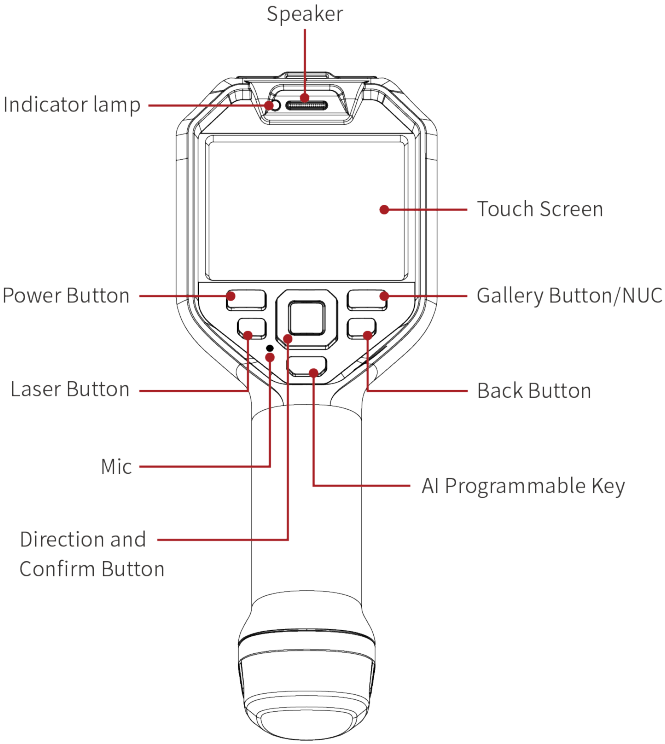
Speaker
Indicator lamp
Touch Screen
Power Button
Gallery Button/NUC
Laser Button
Back Button
Mic
AI Programmable Key
Direction and
Confirm Button

Rear View

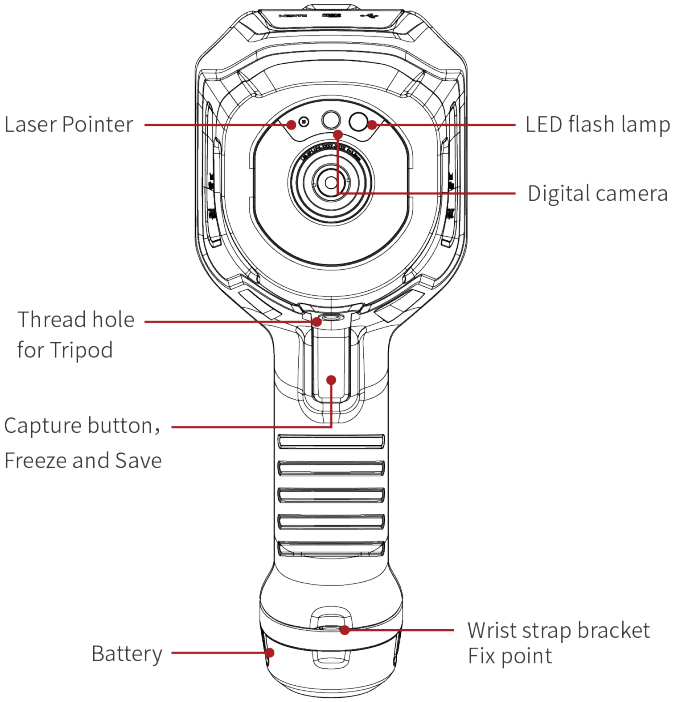
Laser Pointer
LED flash lamp
Digital camera
Thread hole
for Tripod
Capture button,
Freeze and Save
Battery
Wrist strap bracket
Fix point

Top View

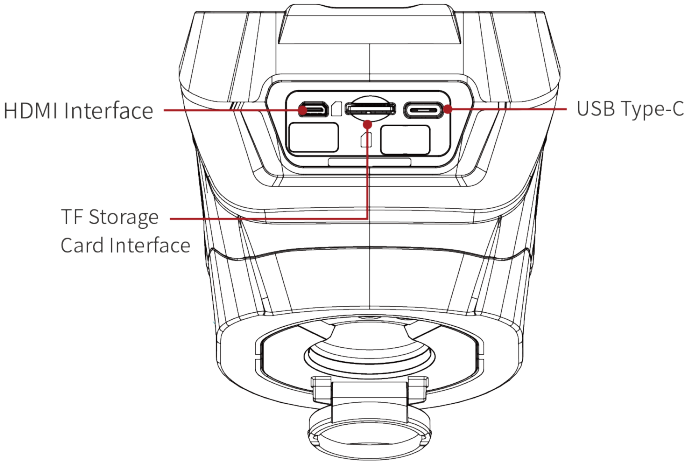

Side View

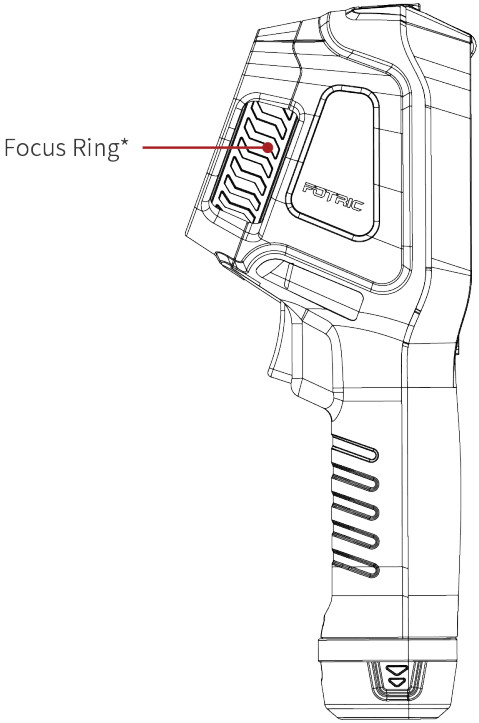

* Available for 320M Series

Laser Pointer

1. General

The laser pointer is a laser transmitter. It takes a laser pulse to reach the target.

Press the laser button to turn it on; a laser icon will display on the screen and a laser dot will appear on the target.

2. Laser warning label

A laser warning label with the following information is attached to the camera:

3. Laser rules and regulations

Wavelength: 635 nm. Maximum output power: 1 mW.

This is a Class 2 Laser Product.

Complies with 21 CFR 1040.10 and 1040.11 except for conformance with IEC 60825-1 Ed. 3., as described in Laser Notice No. 56, dated May 8, 2019.

Caution: Use of controls or adjustments or performance of procedures other than those specified herein may result in hazardous radiation exposure.

Acessories

The documentation shall indicate that only accessories which meet the manufacturer’ s specifications shall be used.

1. Power Adapter

Model: ABT030050D

Input: 100-240V~50/60Hz 1.5A

Output: 5.0Vdc 3.0A

2. Battery

Lithium-ion rechargeable batteries

Model: F900025ACC

Rated: 3.6V 5000mAh 18Wh

3. Battery Charging Dock

Model: F900026ACC

Input: 5.0Vdc 3.0A

4. Power Supply

5.0Vdc 3.0A

5. USB cables

Interface

USB type-C type; conforms to USB 3.0 / 2.0 specification, supports USB OTG; USB 3.0 has a maximum speed of 5Gbps; USB 2.0 supports a maximum speed of 480Mbps, and is downward compatible with full speed (12Mbps) mode

6. HDMI cables

Micro HDMI type,Comply with HDMI 1.4 specification, support 1080p image video transmission at 60Hz frame rate

7. Anti-interference magnetic ring

User Guide: The two snap on type magnetic rings shall be buckled mounted at both ends of HDMI cable respectively, and the position shall be close to the cable inlet and outlet as close as possible, which distance shall not be more than 50mm.

Interface

Main Interface

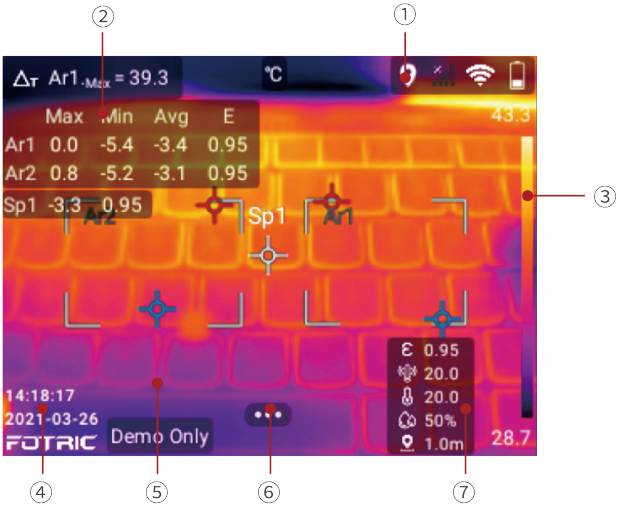

① **Status Bar:** Display Battery, Wi-Fi, Bluetooth, GPS, TF card low storage warning, Laser warning etc.

② **Measurement Result:** Display overview and ROI Max/Min temp, Emissivity etc.

③ **Palette and Temperature scale:** Display palette and Temperature scale range.

④ **Logo and System time:** Display System data &time, Logo

Interface

⑤ **Thermal Imaging Display:** Display thermal image, positions of Overview temperature & ROI temperature MAX/MIN, etc.

⑥ **System Menu Button:** Press to enter Temperature scale mode, Parameters, Image mode, ROI measurement tools, Palette and Settings.

⑦ **Parameters:** Display Emissivity, Reflected temp, Ambient temp, Humidity, and Distance.

Interface

System Menu

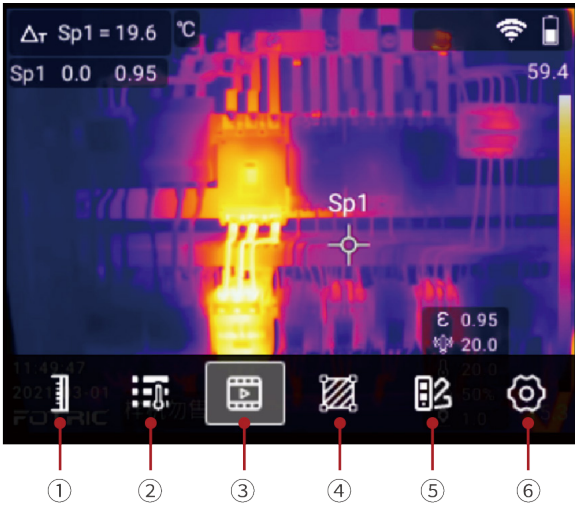

① **Temperature scale:** Auto scale, Manual scale, Touch scale settings.

② **Parameters:** Emissivity, reflected temperature, ambient temperature, humidity, target distance and IR window compensation settings.

③ **Image mode:** Thermal image, Visible light digital image, Picture in Picture,Image fusion mode settings.

④ **Measurement tools:** Add, delete and edit ROI

measurement tools include spots, rectangles, circle, and lines. Temperature rise calculation, ROI alarm display and other settings.

⑤ **Palette：** Multiple palettes and inverted palettes, color Isotherm.

⑥ **Settings：** Capture mode, Connection, Temp measurement Range, Storage & Save options, Device Set.

Interface

Gallery

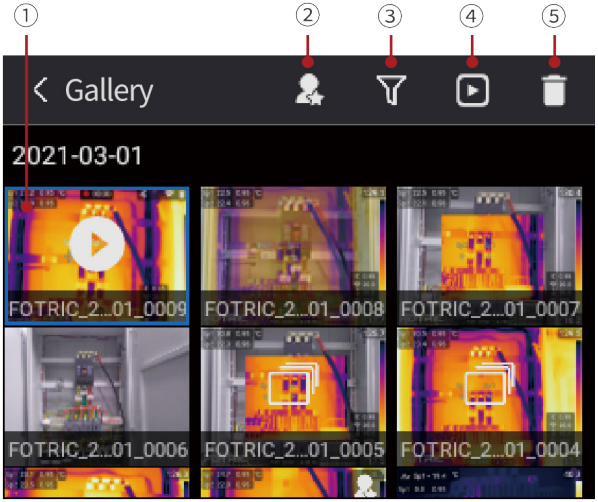

① **Images and videos:** Display captured thermal photos, visible image photos, radiometric and MP4 format thermal videos. Click to choose one; Long press to choose multiple.

② **Favorite:** Only Display favorite photos.

③ **Tags :** Filter by Tags, Display selected tags files.

④ **Analyze:** Analyze thermal photos and videos.

⑤ **Delete:** Delete selected files.

System Settings

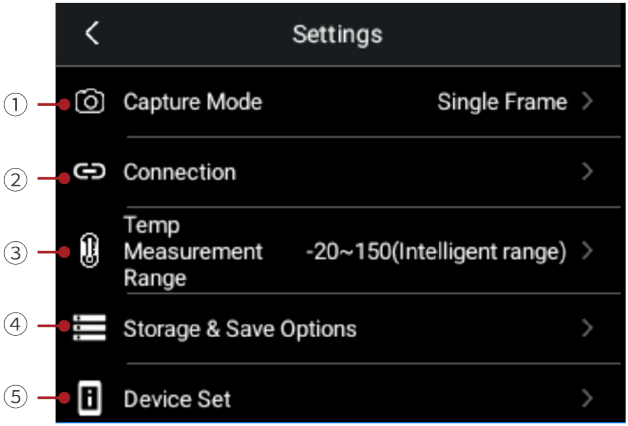

①: Single frame Capture, Recording and time-lapse settings.

②: WLAN, Bluetooth, FTP transfer setting.

③: Temperature measurement range, include Intelligent Range.

④: Settings such as SuperResolution, Video format, digitial camera, delete all saved files, etc.

⑤: Language&Time&Region, TWB, Display settings, Screen off, Reset, About, etc.

Quick-Start

For quick start of the thermal imager, please follow the procedures as below:

1. Insert the battery into the battery compartment of the thermal imager. (Make sure the battery is fully charged before starting up the thermal imager)

2. Insert TF storage card into the TF card slot.

3. Long press the Power Button to turn on the thermal imager.

4. Aim the thermal imager toward the object of interest.

5. For 320M series, adjust the Manual focus ring to get a clear image.

   For 320F series, keep object distance of more than 0.5meters to stay focus.

6. Press the Capture Button to freeze the thermal image, so that it can be analyzed in this interface.

7. Press the Capture Button again; the analyzed thermal image will be saved.

Tips

For quick–start of Fotric AnalyzIR PC software, please follow the procedures as below:

1. Visit **www.fotric.com/support-analyzir** to download and install.

2. Click to start the AnalyzIR professional analysis software

3. Use Type-C USB cable to connect the thermal imager to PC; or insert the TF card into the PC card slot ; or use Wi-Fi FTP. Copy the images from Gallery folder to PC.

4. Click IR file workspaces in the quick collection bar below the AnalyzIR software, and select to add the thermal image files.

5. Analyze, save and generate report as a Word document.

Tips

- This equipment is intended to be used in building inspections, utilities, R&D, and the manufacturing industry.
- It is very important to adjust the focal length correctly. An incorrect focal adjustment will affect the imaging quality and temperature measurement accuracy of the thermal imager.
- The thermal imager has a resolution limit, which depends on the detector size, lens, and distance to the object. If necessary, please move closer to the object. Stay away from hazardous areas or energized electrical components
- Be careful when using the thermal imager perpendicular to the target, because you may become the main radiation source of infrared ray.
- Please choose a high-emission area (for example, an area with rough surface) for measurement.
- Blank objects (and objects with low emissivity) are mainly reflected in the environment, so they may appear wrong result in the thermal imager.
- Various types of faults (such as faults that occur in building construction) may generate the same type of heat distribution pattern.
- Analysis of the infrared images requires corresponding professional knowledge.

* This manual may be inconsistent with the product due to product upgrade or customization; please always refer to the specified product.

Specifications

Power interface input	5V dc 3.0A
Operating Temperature	-20°C to +50°C (-4 °F to 122 °F)
Storage Temperature	-40°C to +70°C (-40 °F ~158 °F)
Relative Humidity	＜ 95%RH
Safety	EN 62368-1:2014+A11:2017 (Power Supply) EN 61010-1:2010+A1:2019
Vibration	2g (GB/T 2423.10-2008/IEC 60068-2-6:1995)
Shock	25g(GB/T 2423.5-2019/IEC60068-2-27:2008)
EMC	EN 61326-1:2013 (immunity) EN 61326-1:2013 Class A (emission) FCC 47 CFR Part15 Class A (emission)
Drop	Engineered to withstand 2 meters (6.5 feet) drop with standard lens
Enclosure Rating	IP54 (protected against dust, limited ingress; protection against water spray from all directions),GB/T 4208-2017/ IEC60529:2013

Specifications

Wi-Fi transmission performance

Band		Rates	Power
2.4GHz	802.11b	1Mbps	16dBm±2.5dB
	802.11b	11Mbps	16dBm±2.5dB
	802.11g	6Mbps	16dBm±2.5dB
	802.11g	54Mbps	14dBm±2.5dB
	802.11n HT20	MCS0	15dBm±2.5dB
	802.11n HT20	MCS7	13dBm±2.5dB
	802.11n HT40	MCS0	14dBm±2.5dB
	802.11n HT40	MCS7	13dBm±2.5dB
5GHz	802.11a	6Mbps	15dBm±2.5dB
	802.11a	54Mbps	13dBm±2.5dB
	802.11n HT20	MCS0	15dBm±2.5dB
	802.11n HT20	MCS7	13dBm±2.5dB
	802.11n HT40	MCS0	15dBm±2.5dB
	802.11n HT40	MCS7	13dBm±2.5dB
	802.11ac VHT20	MCS0	14dBm±2.5dB
	802.11ac VHT20	MCS8	13dBm±2.5dB
	802.11ac VHT40	MCS0	13dBm±2.5dB
	802.11ac VHT40	MCS9	12dBm±2.5dB
	802.11ac VHT80	MCS0	13dBm±2.5dB
	802.11ac VHT80	MCS9	12dBm±2.5dB

Specifications

Wi-Fi reception performance

Band		Rates	Sensitivity
2.4GHz	802.11b	1Mbps	-96dBm
	802.11b	11Mbps	-87dBm
	802.11g	6Mbps	-91dBm
	802.11g	54Mbps	-73dBm
	802.11n HT20	MCS0	-90dBm
	802.11n HT20	MCS7	-72dBm
	802.11n HT40	MCS0	-87dBm
	802.11n HT40	MCS7	-68dBm
5GHz	802.11a	6Mbps	-90dBm
	802.11a	54Mbps	-70dBm
	802.11n HT20	MCS0	-88dBm
	802.11n HT20	MCS7	-69dBm
	802.11n HT40	MCS0	-86dBm
	802.11n HT40	MCS7	-66dBm
	802.11ac VHT20	MCS8	-68dBm
	802.11ac VHT40	MCS9	-64dBm
	802.11ac VHT80	MCS9	-60dBm

Documents

Manuals Download

Before using the product, please visit the following website to download and read the user manuals and operation videos :

FOTRIC 320 Series

www.fotric.com/support-fotric320

Analysis and Report Software

PC Software Download

PC software AnalyzIR is a standard configuration of the product. Please visit the following website to download its installation setup and user manuals:

www.fotric.com/support-analyzir

Appendix A

Emissivity Table

(For reference only)

Material Name	Surface Condition	Temperature (°C)	Emissivity (ε)
Aluminum	Non-oxidized	100	0.20
	Oxidized	100	0.55
Brass	Polished brown	20	0.40
	Unpolished	38	0.22
	Oxidized	100	0.61
Copper	Severely oxidized	20	0.78
Iron	Oxidized	100	0.74
	Rusty	25	0.65
Cast iron	Oxidized	200	0.64
	Non-oxidized	100	0.21
Wrought iron	Roughened	25	0.94
	Polished	38	0.28
Nickel	Oxidized	200	0.37
Stainless steel	Oxidized	60	0.85
Steel	Oxidized at 800℃	200	0.79

Appendix A

Common brick	Surface	20	0.93
Concrete	Surface	20	0.92
Glass	Polished plate	20	0.94
Lacquer	White	100	0.92
	Natural color black	100	0.97
Carbon	Smoke black	25	0.95
	Candle soot	20	0.95
	Graphite rough surface	20	0.98
Paint	Average of 16 colors	100	0.94
Paper	White	20	0.93
Sand	Surface	20	0.90
Wood	Polished	20	0.90
Water	Distilled water	20	0.96
Skin	Human	32	0.98
Pottery	Fine	21	0.90
	Abrasive	21	0.93

Appendix B

Statement

Federal Communications Commission (FCC) Declaration of Conformity

Note:

This equipment has been tested and found to comply with the limits for a Class A digital device, pursuant to part 15 of the FCC Rules. These limits are designed to provide reasonable protection against harmful interference when the equipment is operated in a commercial environment. This equipment generates, uses, and can radiate radio frequency energy and, if not installed and used in accordance with the instruction manual, may cause harmful interference to radio communications. Operation of this equipment in a residential area is likely to cause harmful interference in which case the user will be required to correct the interference at his own expense.

FCC Caution: Any changes or modifications not expressly approved by the party responsible for compliance could void the user's authority to operate this equipment.

Exposure to Radio Frequency (RF) Energy

This equipment complies with FCC radiation exposure limits set forth for an uncontrolled environment. And user must follow the specific operating instructions for satisfying RF exposure compliance. This transmitter must not be co-located or operating in conjunction with any other antenna or transmitter.

The mobile device is designed to meet the requirements for exposure to radio waves established by the Federal

Communications Commission (USA). These requirements set a SAR limit of 1.6 W/kg averaged over one gram of tissue.

The highest SAR value reported under this standard during product certification for use when properly worn on the body is 1.370 W/kg.

According to Article 10 (10) of Directive 2014/53/EU, the packaging shows that this radio equipment will be subject to some restrictions when placed on the market in Belgium (BE), Bulgaria (BG), the Czech Republic (CZ), Denmark (DK), Germany (DE), Estonia (EE), Ireland (IE), Greece (EL), Spain (ES), France (FR), Croatia (HR), Italy (IT), Cyprus (CY), Latvia (LV), Lithuania (LT), Luxembourg (LU), Hungary (HU), Malta (MT), Netherlands (NL), Austria (AT), Poland (PL), Portugal (PT), Romania (RO), Slovenia (SI), Slovakia (SK), Finland (FI), Sweden (SE), the United Kingdom (UK), Turkey(TR), Norway (NO), Switzerland (CH), Iceland (IS), and Liechtenstein (LI).

The WLAN function for this device is restricted to indoor use only when operating in the 5150 to 5350 MHz frequency range.

BE	BG	CZ	DK	DE
EE	IE	EL	ES	FR
HR	IT	CY	LV	LT
LU	HU	MT	NL	AT
PL	PT	RO	SI	SK
FI	SE	UK	TR	NO
CH	IS	LI		

Contact FOTRIC

CHINA
Lane 2500-14, XiupuRoad,
Pudong District, Shanghai,
P.R.China
+86 (21) 6698 1992

U.S.
+1 (214) 235-4544

info@fotric.com
www.fotric.com

Certificate of QC

This is to certify that the thermal imaging camera listed on this card meets the requirements of FOTRIC quality control procedures.

FOTRIC 34* and 32* series's technical standards are formulated following the international standards for the industrial testing infrared thermal imager and the relevant standards cited therein, as listed below:

- IEC 60529:1989+A1:1999+A2:2013 Enclosure protection grade (IP 54)
- IEC 60068-2-27:2008 Environmental test (Shock)
- IEC 60068-2-6:2007 Environmental test for electrical and electronic products (Vibration)
- IEC 62368-1:2018/COR1:2020 (Power supply) Audio/video, information, and communication technology equipment - part1: Safety requirements
- EN 61326-1:2013 Electrical equipment for measurement, control, and laboratory use-EMC requirements - Part 1: General requirements
- EN 301 489-1 V2.2.3:2019 Electro Magnetic Compatibility (EMC) standard for radio equipment and services; Part 1: Common technical requirements; Harmonised Standard for ElectroMagnetic Compatibility
- Draft EN 301 489-3 V2.1.2:2021 Specific conditions for Short-Range Devices (SRD) operating on frequencies between 9 kHz and 246 GHz
- EN 301 489-17 V3.2.4:2020 Specific conditions for Broadband Data Transmission Systems
- FCC 47 CFR Part 15 Class A RADIO FREQUENCY DEVICES
- KS C 9832:2019 Electromagnetic compatibility of multimedia equipment - Emission requirements 멀티미디어 기기 전자파 장해 시험방법
- KS C 9835:2019 Electromagnetic compatibility of multimedia equipment - Immunity requirements 멀티미디어 기기 전자파 내성 시험방법
- Class 2 Laser Product: Complies with 21 CFR 1040.10 and 1040.11 except for conformance with IEC 60825-1

Warranty Card

Thank you for choosing FOTRIC thermal imaging camera. We design products to deliver long-lasting performance under our warranty policy (starting from date of original purchase). If any manufacturing defects appear under normal use, the product will be repaired or replaced by FOTRIC INC. with no cost to the owner

_____

Innovation
Excellence
Integrity

Company Disclaimer
Equipment described herein may require EU, US and UNSC authorization for export purposes.
Imagery for illustration purposes only.
Specifications are subject to change without notice.
FOTRIC INC. © 2021 All Rights reserved.

FOTRIC INC.

Cal Power

Via Acquanera, 29 22100 COMO
tel. 031.526.566 (r.a.) fax 031.507.984
info@calpower.it www.calpower.it