MAGNA-POWER

MAGNADC

Cal Power
Via Acquanera, 29 22100 COMO
tel. 031.526.566 (r.a.) fax 031.507.984
info@calpower.it www.calpower.it

ML SERIES

Programmable DC Power Supply

MODELS
38

CONFIGURATIONS
12,500+

POWER LEVELS
500 kW and 1,000 kW • Scalable to 10 MW+

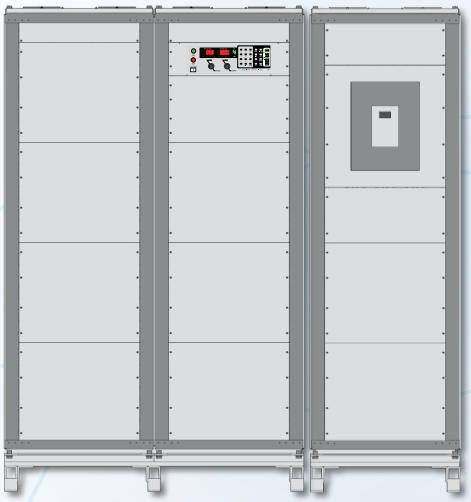

500 kW ML Series programmable DC power supply

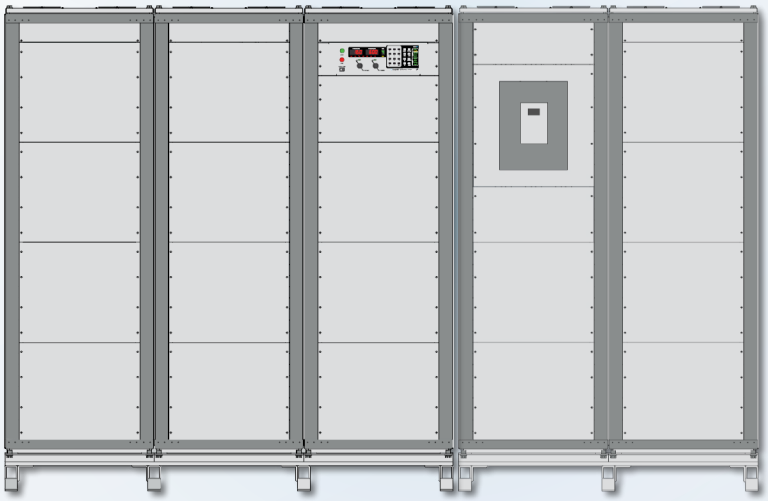

1,000 kW ML Series programmable DC power supply

Introducing to the ML Series

The ML Series from Magna-Power Electronics has been engineered from the ground up to set a new standard in power density and performance. Leveraging advanced water-cooling technology, the 500 kW and 1,000 kW ML Series models achieves a nearly fourfold increase in power density compared to Magna-Power's alternative air-cooled models. With the ability to connect in master-slave parallel configurations, the ML Series can reach power levels exceeding 10 MW. Built upon Magna-Power's signature reliable current-fed power processing topology and innovative harmonic neutralization technology, the ML Series power supplies provide reliable and efficient power conversion with low harmonic distortion. Designed and manufactured in Flemington, New Jersey, the ML Series power supplies embody Magna-Power's commitment to quality, reliability, and advanced engineering.

Key Features

- Voltage and current control
- 500 kW and 1,000 kW models; expandable to 10 MW
- 12-bit precision control
- Remote programming using SCPI commands
- Programmable protection features
- Safety interlock for external emergency stop
- LabVIEW drivers
- Continuous full power operation up to 50°C ambient
- 37-pin analog-digital user I/O port
- Integrated solenoid for condensation control
- High-performance master-slaving
- Local, remote, and leadless voltage sensing
- RS232 standard and LAN TCP/IP Ethernet communications options available
- RIS Panel software platform included
- Made in the USA

Building on over 40 Years of Power Supply Innovation

The MagnaDC Platform

Magna-Power's MagnaDC product line of programmable DC power supplies has evolved over 40 years, incorporating the latest innovations in power electronics and building upon Magna-Power's signature current-fed power processing topology. Using a common control platform, the product line spans over 400,000 configurations, covering an extremely wide range of voltages and currents, allowing users to accurately select an appropriately rated product without needing to oversize their power supply. Standard options are offered to tailor performance or cooling for the intended application.

MagnaDC programmable DC power supplies feature a common SCPI command-set and come standard with LabVIEW drivers, IVI drivers, software GUI, extensive diagnostics, safety interlock, and an external I/O port referenced to earth ground. In addition, all Magna-Power products are designed to operate at peak ratings, continuously, at 50°C.

Reliable Current-Fed Power Processing

All MagnaDC programmable DC power supplies utilize high-frequency IGBT- and MOSFET-based power processing in a current-fed topology. This topology adds an additional stage over the conventional voltage-fed topology for enhanced control and system protection, ensuring that even under a fault condition, the power supply will self-protect. Due to the self-protecting characteristics of this topology, the possibility of fast rising current spikes and magnetic core saturation is eliminated. This topology coupled with state-of-the-art Silicon Carbide (SiC) power semiconductors enables the ML Series to deliver class-leading power density, reliability, and efficiency with continuous full-power operation up to 50°C ambient.

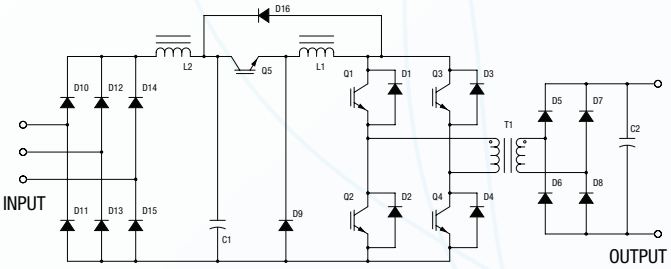

Simplified topology diagram for Magna-Power's current-fed power processing

Water Cooled Design

With over 15 years of expertise in manufacturing water-cooled magnetics, heatsinks, and power supplies, Magna-Power has developed several key advancements for the ML Series to achieve its significant increase in power density. Each power electronics stage is mounted on a dedicated high-heat-transfer aluminum chill plate with press-fit copper tubes, ensuring manufacturability and serviceability. These stages slide into the rack enclosure on rails, secured and interconnected with a wire harness. Magnetic components are wound with chill plates around the transformer core, and a precisely tuned water distribution manifold ensures adequate flow to each stage. An integrated solenoid prevents water flow until internal temperatures reach a set value to minimize condensation, while a solenoid bypass connection is also provided.

The coolant path features brass fittings and solenoids, PEX tubing, and copper. Deionized water is not supported. Fans are incorporated to maintain airflow from bottom to top, preventing the buildup of hotspots and enhancing overall thermal management.

High Performance Plug & Play Master-Slaving

All ML Series programmable DC power supplies come with master-slaving capability.

The MagnaDC master-slaving strategy helps to ensures no degradation in performance as units are added in parallel or series by providing gate drive signals directly from the master to the slave units. This strategy ensures one control loop for the system and eliminates the noise susceptibility commonly found when sending analog control references over long distances.

The Universal Interface Device 47 (UID47) accessory eases master-slave parallel or series configuration of Magna-Power DC power supplies, enabling near equal current or voltage sharing, depending on the configuration.

Master-slave series operation is supported to combined voltages up to the product's DC Output Isolation specification. No external blocking diodes are requires for series operation.

Standard Safety Features with Emergency Stop

The ML Series features a soft-start circuit to eliminate large peak in-rush currents from the AC mains, ensuring AC current draw never exceeds the current draw at full load. The ML Series programmable DC power supplies have extensive safety and diagnostic functions, including:

- AC Phase Loss
- Over Voltage Trip (Programmable)
- Over Current Trip (Programmable)
- Cleared Fuse
- Over Voltage on Program Line Input
- Over Temperature on Internal Heatsinks
- Safety Interlock / Emergency Stop Fault

When in standby or diagnostic fault, the AC mains are mechanically disconnected by an embedded AC contactor, providing confidence that the unit is only processing power when desired. Users can easily identify faults using the Status message display or by SCPI commands.

Finally, the interlock / emergency stop input is included as standard. This feature provides a 5V interlock input, which when coupled with the provided 5V reference signal, allows for a dry contact to easily trigger a latching interlock fault, while maintaining control power.

Made in the USA, Available Worldwide

MagnaDC programmable DC power supplies are designed and manufactured at Magna-Power's 73,500 sq-ft vertically integrated USA manufacturing facility in Flemington, New Jersey. From raw materials to the completed product, Magna-Power has insourced nearly the entire production process to maintain complete control of quality, cost, and build-time. Heat-sinks and various metal assemblies are machined through both automated CNC and EDM. Sheet metal is cut, punched, sanded, bent, and powder coated in-house. Magnetics are wound-to-order from validated designs based on a model's voltage and current. A full surface mount technology (SMT) with multiple stages of 3D automated optical inspection ensures high-quality printed circuit board assemblies. Finally, after assembly, products undergo comprehensive test and calibration, followed by an extended burn-in period.

Products are sold directly from the factory and through distribution, with a service network around the world.

Ultimate Programming Flexibility

Available Options for Tailored Performance

Magna-Power's ML Series power supplies are designed to be flexible, depending on the application's requirements. With its configured-to-order integrated options, including:

- Integrated Blocking Diode (+BD)
- High Slew Rate Output (+HS)
- High Isolation Output (+ISO)
- LXI TCP/IP Ethernet (+LXI)

External User I/O for PLC Control or PHIL Simulation

Using the rear User 37-pin I/O connector, the ML Series DC power supplies can be completely controlled and monitored using external signals. The voltage, current, over voltage and over current set points are set by applying a 0-10V analog signal. Each diagnostic condition is given a designated pin, which reads +5V when high. Reference +5V and +10V signals are provided, eliminating the need for external voltage signals and allowing the use of dry contacts.

All these pins are isolated from the output terminals and referenced to earth-ground as standard—no additional isolation equipment or options necessary.

The following list summarizes the available I/O from the power supply:

- 4 analog programming inputs
- 2 analog measurement outputs
- 5 digital inputs
- 15 digital outputs
- +2.5V, +5V and +10V reference signals

With the High Slew Rate Output (+HS) option equipped, high bandwidth operation is enabled along with fast rise times, allowing the ML Series DC power supply to address requirements for Hardware-in-the-Loop (HIL).

Software Integration with Ease

With standard support for Standard Commands for Programmable Instrumentation (SCPI) and Modbus, SLx Series power supplies provide an easy-to-use API with well-documented commands in readable text. Over 60 commands allow programmatic access to product registers, starting and stopping the product, control of voltage, current and power, slew rate control, high-accuracy measurement queries, and product configuration. Simple scripting or complex software can be achieved, with extensive documentation and examples provided by Magna-Power.

```
import serial
conn = serial.Serial(port='COM8', baudrate=19200)
conn.write('*IDN?\n')
print conn.readline()
conn.write('VOLT 1000\n')
conn.write('CURR 5\n')
conn.write('OUTP:START\n')
conn.write('MEAS:CURR?\n')
print conn.readline()
```

Basic Python programming example using SCPI commands over RS232 to sequence through an array of current set points.

ML Series Model Ordering Guide

Over 25,000+ configurations of ML Series models are available, based on AC input voltage, DC output ratings, and integrated options. The following model ordering guide and models table provides the available ML Series ratings and model configuration guidance.

MLD1250-800/480+LXI

- Integrated Options
- AC Input Voltage (Vac)
- Maximum DC Output Current (Adc)
- Maximum DC Output Voltage (Vdc)
- Front Panel Type
- Product Series

	500 kW	1000 kW		
Max Voltage (Vdc)	Max Current (Adc)		Ripple (mVrms)	Efficiency
100	5000	N/A	60	91%
125	4000	N/A	100	91%
160	3125	N/A	120	92%
200	2500	5000	125	92%
250	2000	4000	130	92%
300	1666	3333	160	93%
375	1333	2666	170	93%
400	1250	2500	180	95%
500	1000	2000	220	95%
600	833	1666	250	95%
800	625	1250	300	96%
1000	500	1000	400	96%
1250	400	800	500	96%
1600	312	625	600	96%
2000	250	500	800	96%
2500	200	400	900	96%
3000	166	333	1000	96%
4000	125	250	1100	96%
5000	100	200	1500	96%
6000	83	166.6	2000	96%

Available AC Input Voltages

- **440** Vac, 3-Phase
  AC Input Current, 500 kW Models: 760 Aac
  AC Input Current, 1000 kW Models: 1519 Aac
- **480** Vac, 3-Phase
  AC Input Current, 500 kW Models: 697 Aac
  AC Input Current, 1000 kW Models: 1393 Aac

Available Integrated Options

Hardware

- High Isolation Output **+ISO**
- High Slew Rate Output **+HS**
- Integrated Blocking Diode **+BD**

Communications

- LXI TCP/IP Ethernet **+LXI**

AC Input Specifications	
Input Voltages Available AC Input voltage specified at time of order and cannot be modified	440 Vac, 3-phase 480 Vac, 3-phase
Input Voltage Tolerance	± 10%
Input Voltage Frequency	50-60 Hz
Power Factor Measured at max power	> 0.96
Input Isolation Measured line-to-ground	± 2000 Vdc
AC Circuit Protection	UL/CSA listed circuit breaker

DC Output Specifications	
Voltage Ripple	Model specific. Refer to models table.
Line Regulation	Voltage control: ± 0.04% of rated voltage Current control: ± 0.03% of rated current
Load Regulation	Voltage control: ± 0.02% of rated voltage Current control: ± 0.06% of rated current
Stability FWHM, measured at 25°C over 8 hrs after 30 min warm-up	± 0.10%
Temperature Coefficient	Voltage control: 0.04%/°C of rated voltage Current control: 0.06%/°C of rated current
Efficiency	Up to 96%. Model specific. Refer to Models table.
Slew Rate Standard models	< 170 ms, output voltage change from 0 to 63% < 200 ms, output current change from 0 to 63%
Slew Rate Models with High Slew Rate (+HS) Option	< 5 ms, output voltage change from 0 to 63% < 10 ms, output current change from 0 to 63%
Output Isolation Measured output-to-ground Models rated ≤ 1000 Vdc	± 1500 Vdc
Output Isolation Measured output-to-ground Models rated > 1000 Vdc or models with High Isolation Output (+ISO) option	± 6000 Vdc

Interface Specifications	
Front Panel Programming	Two machined aluminum 10-turn knobs and keypad
Communication Interfaces Standard	RS232: D-sub DB-9, Female
External User I/O Port Standard	37-pin D-sub DB-7, female Referenced to ground; isolated from the DC output See User Manual for pin layout
Communication Interfaces Optional	LXI TCP/IP Ethernet (+LXI): RJ-45

Programming Specifications	
Resolution, Digital Programming Front panel or communication interfaces	12-bit, 0.025% of rated voltage, current or power
Accuracy, Programming Output value to set point value	Voltage: ± 0.075% of rated voltage Current: ± 0.075% of rated current
Accuracy, Measurement Output value to returned value	Voltage: ± 0.20% of rated voltage Current: ± 0.20% of rated current
Trip Settings Range	Over Voltage: 10% to 110% of rated voltage Over Current: 10% to 110% of rated current
Computer Command Protocol	Standard Commands for Programmable Instruments (SCPI) (ASCII-based commands)
Remote Sense Limits Wired; Available on models rated ≤ 1000 Vdc	3% maximum voltage drop from output to load
Analog I/O 4 analog programming inputs 2 analog measurement outputs Reference signal provided	Analog programming inputs: 0-10 V Analog programming impedance: 10 kΩ Analog measurement outputs: 0-10V, 5 mA capacity Analog measurement impedance: 100 Ω Analog reference signal: 10 V, 5 mA capacity, 1 Ω
Digital I/O 5 digital control inputs 15 digital monitoring outputs Reference signal provided	Digital control inputs: 5 V Digital control inputs impedance: 10 kΩ Digital monitoring outputs: 5 V, 5 mA capacity Digital reference signal: 5 V, 25 mA capacity

Physical Specifications	
Size & Weight 500 kW models	Ships as two components: 500 kW Power Supply 76.4" H x 48" W x 31.5" D (194.1 x 121.9 x 80.0 cm) 2500 lbs (1134 kg) 500 kW Harmonic Neutralizer 76.4" H x 24" W x 31.5" D (194.1 x 61.0 x 80.0 cm) 1500 lbs (680 kg)
Size & Weight 1000 kW models	Ships as two components: 1000 kW Power Supply 76.4" H x 72" W x 31.5" D (194.1 x 182.9 x 80.0 cm) 3750 lbs (1701 kg) 1000 kW Harmonic Neutralizer 76.4" H x 48" W x 31.5" D (194.1 x 121.9 x 80.0 cm) 2850 lbs (1293 kg)

Environmental Specifications	
Ambient Operating Temperature	0°C to 50°C
Storage Temperature	-40°C to +85°C
Humidity	Relative humidity up to 95% non-condensing
Air Flow To ensure even heat distribution for water cooling system	Bottom air inlet, top exhaust
Coolant Supply Requirement for supplied coolant Separate coolant connections for power supply rack and harmonic neutralizer rack	Maximum inlet temperature: 25°C Maximum inlet pressure: 80 psi Inlet and outlet fittings provided: 1" Female NPT Materials in coolant path: Copper pipe, PEX tubing, brass solenoid & fittings
Minimum Coolant Flow Rate 500 kW models	9 GPM
Minimum Coolant Flow Rate 1000 kW models	15 GPM

Regulatory Specifications	
EMC	Complies with 2014/30/EU (EMC Directive) CISPR 22 / EN 55022 Class A
Safety	Complies with EN61010-1 and 2014/35/EU (Low Voltage Directive)
CE Mark	Yes
RoHS Compliant	Yes
REACH Compliant	Yes

Magna-Power Electronics is a registered trademark of Magna-Power Electronics, Inc.
Specifications are subject to change without notice.

Dimensional Diagrams

500 kW ML Series Power Supply

The 500 kW ML Series Power Supply spans two standard 19” rack enclosures that are welded together. The Power Supply ships separately from the 500 kW Harmonic Neutralizer, detailed on the following page, which is positioned to the right of the Power Supply. User AC power is connected to the Harmonic Neutralizer, with internal wiring provided to connect the secondary of the Harmonic Neutralizer to the Power Supply. User-provided water is connected to the Power Supply, with an internal quick disconnect provided for connections to the Harmonic Neutralizer.

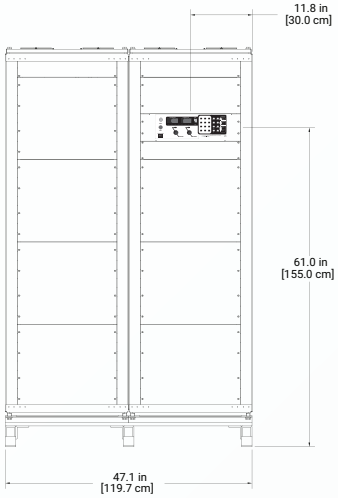

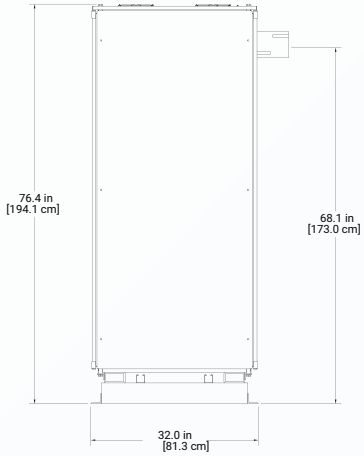

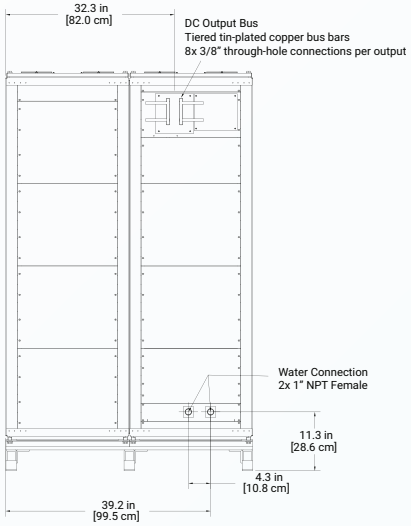

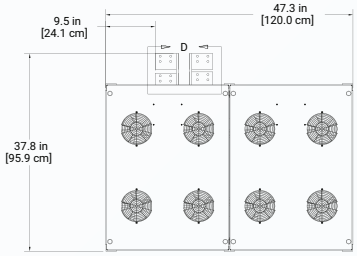

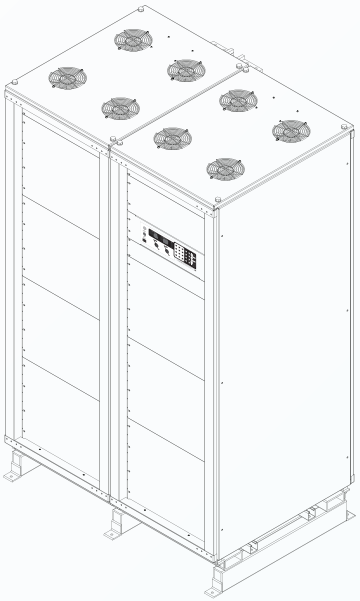

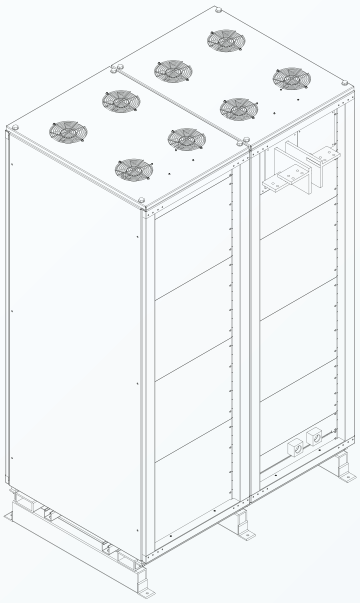

3D STP file available to download from ML Series Downloads on magna-power.com

Dimensional Diagrams

500 kW ML Series Harmonic Neutralizer

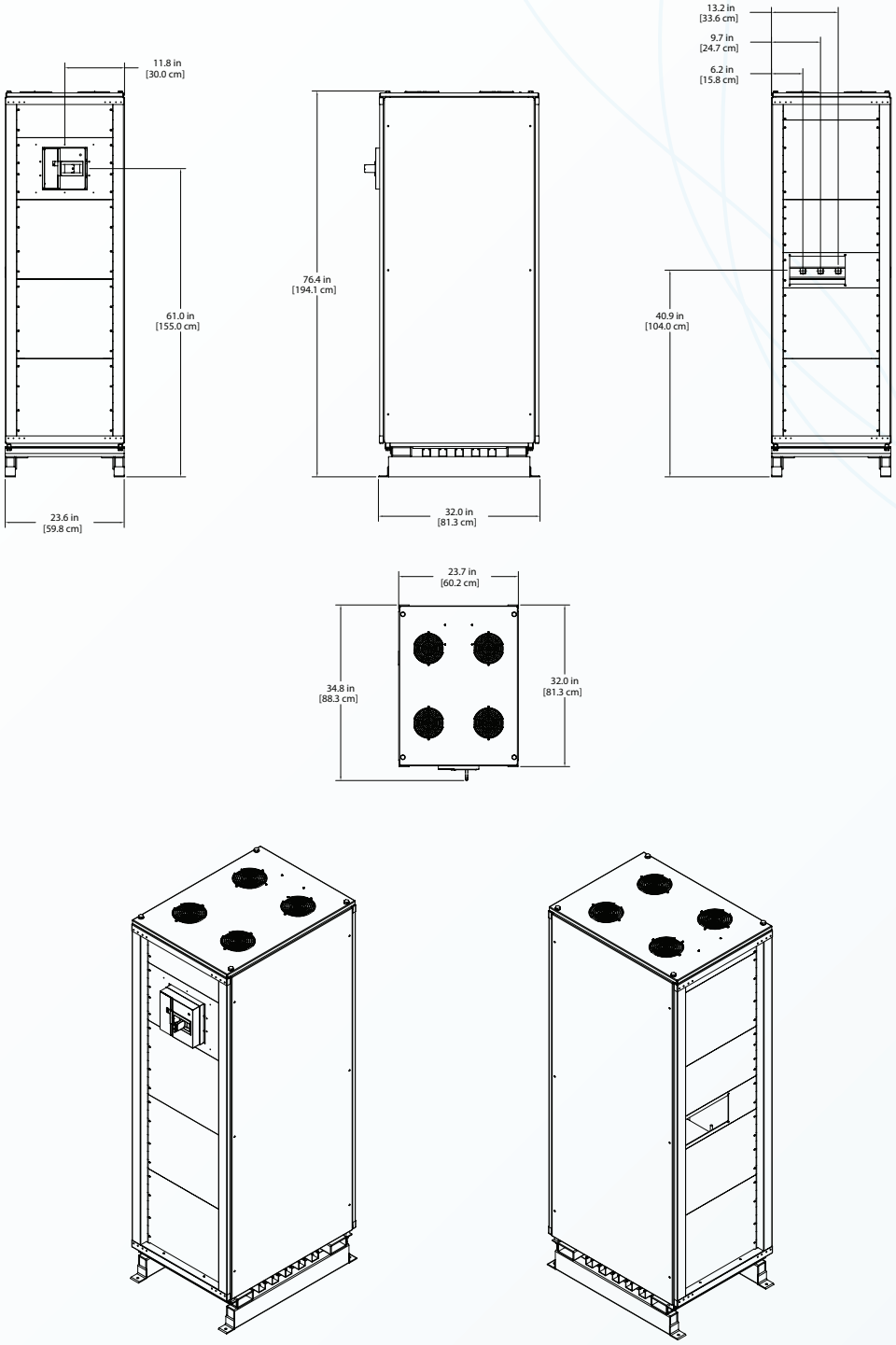

Dimensional Diagrams

1000 kW ML Series Power Supply

The 1000 kW ML Series Power Supply spans three standard 19” rack enclosures that are welded together. The Power Supply ships separately from the 1000 kW Harmonic Neutralizer, detailed on the following page, which is positioned to the right of the Power Supply. User AC power is connected to the Harmonic Neutralizer, with internal wiring provided to connect the secondary of the Harmonic Neutralizer to the Power Supply. User-provided water is connected to the Power Supply, with an internal quick disconnect provided for connections to the Harmonic Neutralizer.

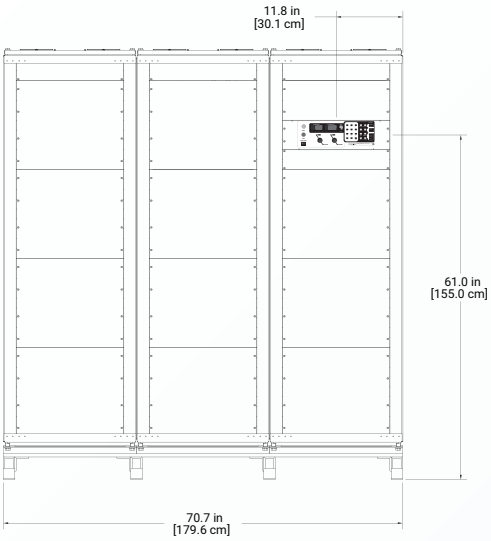

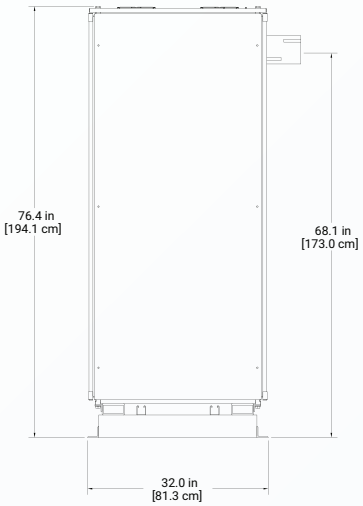

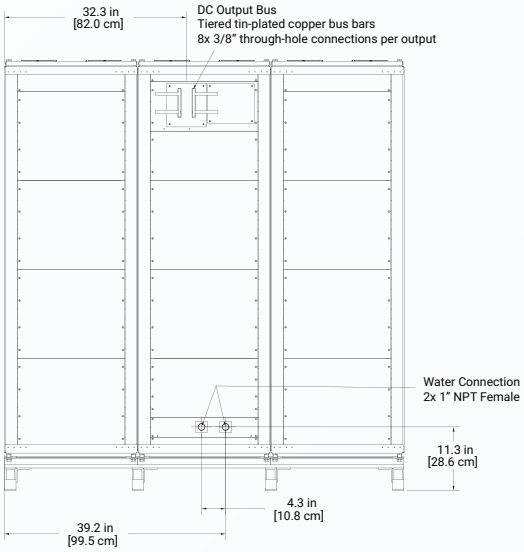

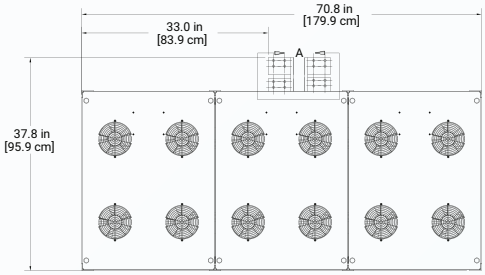

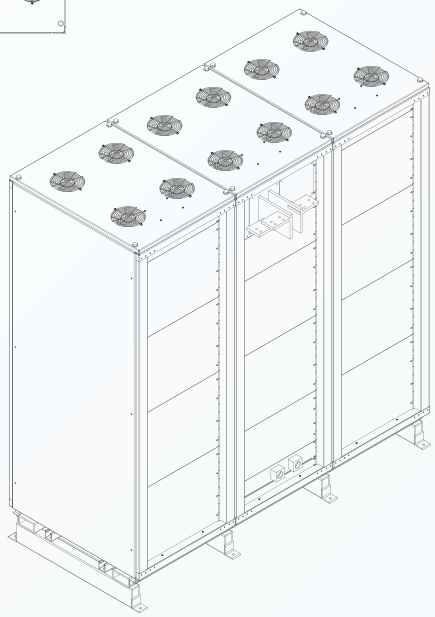

3D STP file available to download from ML Series Downloads on magna-power.com

Dimensional Diagrams

1000 kW ML Series Harmonic Neutralizer

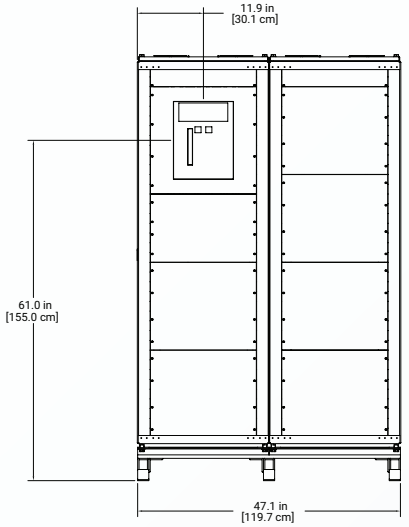

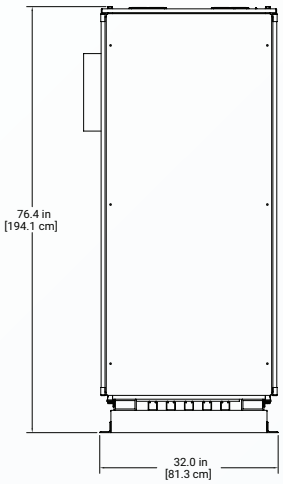

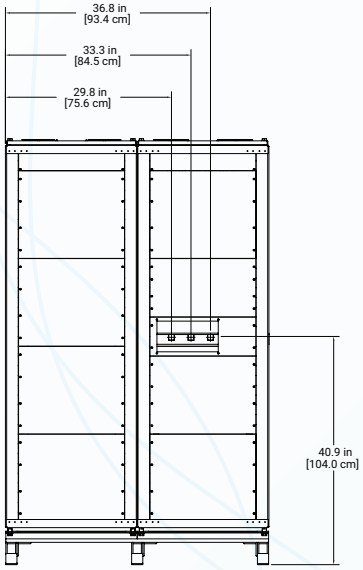

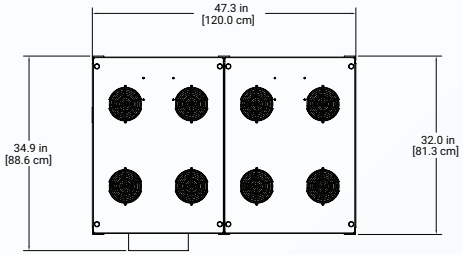

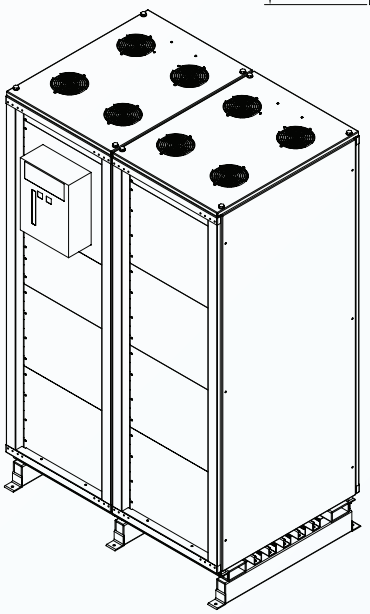

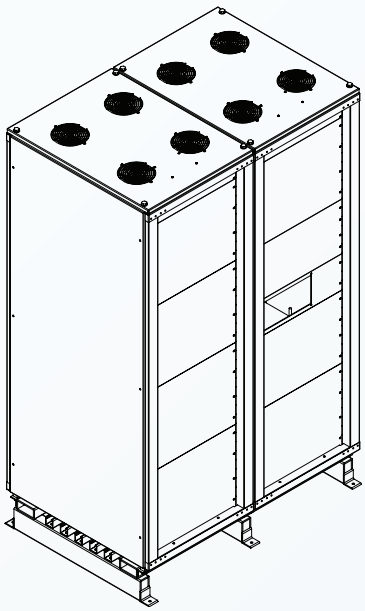

Dimensional Diagrams

AC Input Power Connections

User AC power is connected to three copper bus bars located behind a cover/access panel. Wire should be terminated with a 3/8" ring terminal to mate with the provided mating hardware. The bus bars support wire connections from both sides of the bus bar.

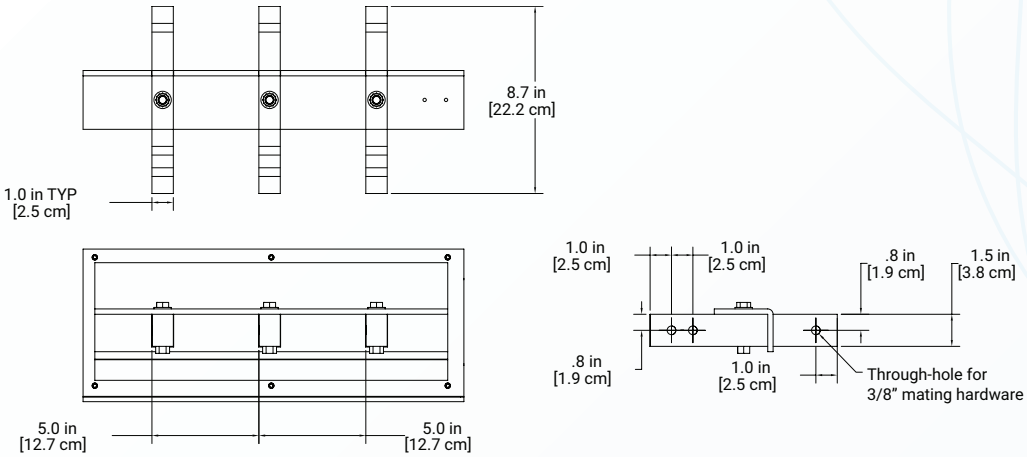

DC Output Power Connections

Tiered tin-plated copper bus bars provide a multitude of connection locations for the DC output. If using cable for user connections, cables should be terminated with a 3/8" ring terminal to mate with the provided mating hardware.

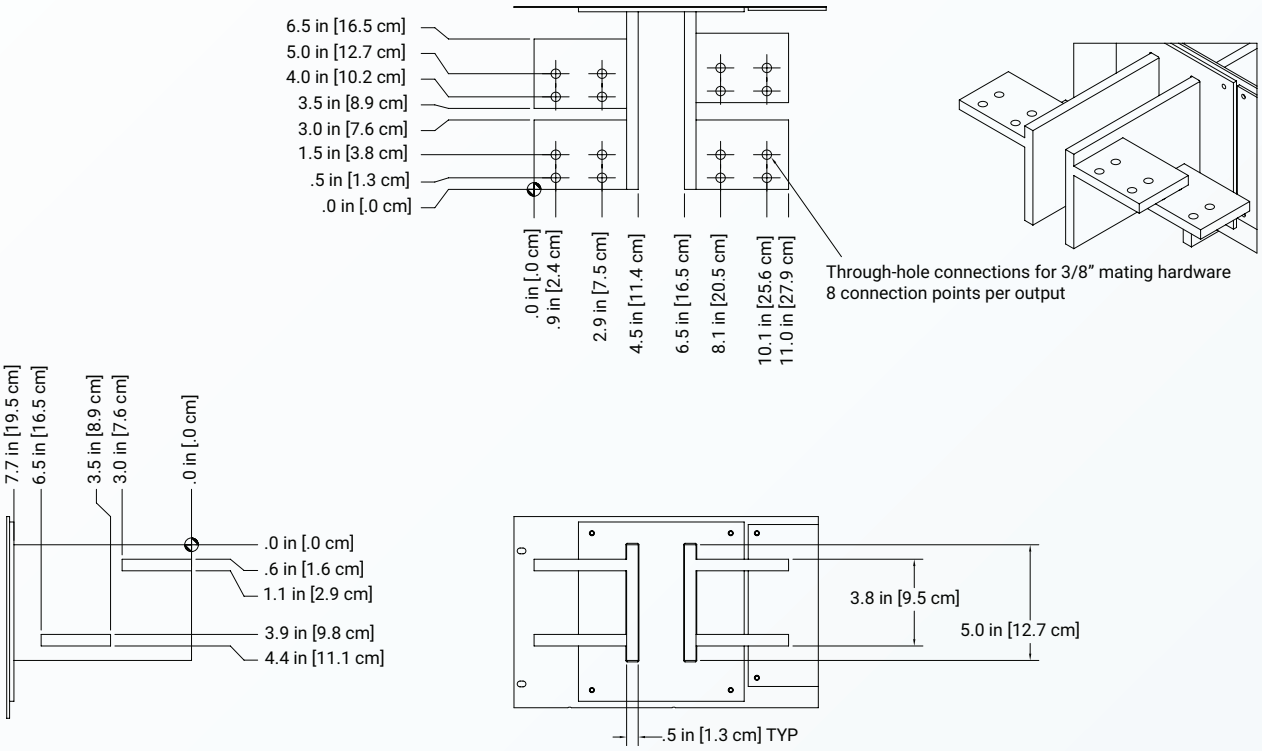

Available Options

Blocking Diode (+BD)

The integrated **Blocking Diode (+BD)** option provides an internally heat-sunk protection diode on the positive output terminal of a MagnaDC programmable DC power supply. This diode protects the product's output from reverse voltage up to 1200 Vdc. All voltage sensing is performed after the protection diode—at the product's output terminals—making the diode's operation completely transparent to the performance of the power supply.

The +BD option is recommended for applications where there is significant back-emf or the possibility of a DC output voltage that could exceed the power supply's output voltage rating, such as:

- DC motor drives
- Battery and capacitor charging
- Large electromagnets

In these applications, the integrated blocking diode can be used to prevent back-emf from the energy stored in the load into the power supply's output. Furthermore, the integrated blocking diode will prevent the power supply's internal bleed resistance from discharging the energy storaged in the load when the power supply is off or in standby.

Availability

The +BD option is available for models with maximum output voltage rating as specified for the following product series:

- TS Series, models rated from 40 Vdc to 1000 Vdc
- MS Series, models rated from 40 Vdc to 1000 Vdc
- MT Series, models rated from 125 Vdc to 1000 Vdc
- ML Series, models rated from 250 Vdc to 1000 Vdc

The +BD option cannot be combined with the +ISO option.

Specifications

Additional Specifications for Blocking Diode (+BD) Option

Reverse Voltage Rating Models Rated 125 Vdc to 1000 Vdc	1200 Vdc
Reverse Voltage Rating Models Rated Below 125 Vdc	200 Vdc
Additional Losses Models Rated 125 Vdc to 1000 Vdc	Up to 1.4%
Additional Losses Models Rated Below 125 Vdc	Up to 2.5%

High Isolation Output (+ISO)

Certain applications require floating the output voltage to values beyond the power supply isolation rating. Magna-Power's **High Isolation Output Option (+ISO)** enables a TS Series, MS Series or MT Series model with a peak output voltage rating of 250 Vdc through 1000 Vdc to be rated for a higher voltage output isolation. Improved isolation is achieved by a novel output stage with improved controller isolation. In addition to being able to float the power supply to a higher output voltage, this option also enables lower voltage units to be tied together in series up to its new higher isolation rating, in accordance with the table in the Specifications section below.

Availability

The +ISO option is available for models with maximum output voltage rating as specified for the following product series:

- TS Series, models rated from 250 Vdc to 1000 Vdc
- MS Series, models rated from 250 Vdc to 1000 Vdc
- MT Series, models rated from 250 Vdc to 1000 Vdc

The +ISO option cannot be combined with the +BD or +WC options. Addition of the +ISO option will cause the product's wired remote sense feature to be removed.

Specifications

Output Isolation Rating for Various Configurations

Product Series	Output Isolation Standard, No Option	Output Isolation for Models Rated 250-1000 Vdc With +ISO Option	Output Isolation for Models Rated Above 1000 Vdc; Standard, No Option Necessary
TS Series	±1000 Vdc	±(3000 Vdc + Vo/2)	±(3000 Vdc + Vo/2)
MT Series	±1000 Vdc	±6000 Vdc	±6000 Vdc
ML Series	±1000 Vdc	±6000 Vdc	±6000 Vdc

High Slew Rate Output (+HS)

The **High Slew Rate Output (+HS)** solves several limitations inherent in switching power supply design. Rapid voltage transitions require internal electronics to supply the energy to charge and discharge output capacitors. Peak currents internal to the power supply define slew rate; utilizing less capacitance enables voltage transitions in shorter time periods. Additionally, less capacitance reduces requirements for discharge demands during open circuit conditions.

The standard output stage Magna-Power Electronics power supplies has been designed to provide the lowest possible output ripple voltage within the constraints of available components, size, and cost. Part of the output stage consists of a bank of aluminum electrolytic capacitors which has the desired electrical properties to provide this function. These components require bleed resistors to discharge any voltage when the power supply has no load and is disabled. While the presence of these components and the resulting performance are normally industry accepted, there are applications where lower output capacitance and lower loss bleed resistors are extremely desirable and higher ripple voltage is acceptable. To meet this need, a high-slew rate option is available which has an output stage consisting of low capacitance film and aluminum electrolytic capacitors and lower loss bleed resistors. Applications for the high-slew rate option include battery charging, photovoltaic emulation, power waveform generation, and medium speed power pulsing. These applications all benefit from higher bandwidth and in many cases, can tolerate increased ripple voltage.

Key Applications

For battery charger applications, output capacitance and internal bleed resistors present themselves as a load to the connecting batteries. One common practice is to use a series diode to block reverse current flow with the sacrifice of increased cost and lower efficiency. The high slew rate option, with its lower output capacitance and lower loss bleed resistors, enables direct connection to batteries without series blocking diodes.

For photovoltaic emulation applications, higher bandwidth and lower output capacitance enable improved performance with higher speed, maximum power tracker algorithms. Maximum power tracker circuitry deviates the operating point of photovoltaic arrays to determine maximum power output. Slow responding emulation sources can present a problem when the speed of the algorithm exceeds that of the source. Furthermore, with lower output capacitance, changes in the operating point and transients, caused by shorting the solar inverter input, produce lower unwanted input currents.

The high-slew rate option enables the power supply to operate as a low frequency, power pulse generator. With the special capacitors selected for this option, it is possible to superimpose waveforms or produce a medium speed pulse on top of the dc output and expect normal capacitor life. It is important to note that the power supply output is single quadrant; that is, the output voltage or current cannot reverse.

Specifications

- < 5 ms slew rate for a programmed output voltage change from 0 to 63%
- < 10 ms for a programmed output current change from 0 to 63%

LXI TCP/IP Ethernet (+LXI)

Certified to the LXI Standard (Class C), the +LXI option allows the product to be fully controlled over an a traditional computer network with a fully integrated TCP/IP Ethernet interface.

LXI is an instrumentation platform based on industry standard Ethernet technology designed to provide modularity, flexibility, and performance to small- and medium-sized systems. All of the product's standard SCPI commands are supported over the +LXI option, along with all provided software and drivers. The LXI TCP/IP Ethernet interface also support mDNS, a protocol that allows devices to perform DNS operation on a local link, even without the presence of an administered DNS server.

LXI's advantages are exemplified in its compact, flexible package providing high-speed I/O and reliable measurements. The Magna-Power Electronics LXI TCP/IP Ethernet option includes an embedded web-server, allowing configuration of static or dynamic IP address assignment.

Cal Power
Via Acquanera, 29 22100 COMO
tel. 031.526.566 (r.a.) fax 031.507.984
info@calpower.it www.calpower.it