AMETEK
PROGRAMMABLE POWER

Asterion

Sorensen

Asterion DC Series

High Performance Programmable DC Power Supply

1.7 / 3.4 / 5 / 10 kW
40 V to 600 V
2.8 A to 250 A

Advanced Features

- High power density up to 5 kW in a 1U chassis and 10 kW in a 2U chassis
- Fixed or autoranging output models
- Intuitive touch panel control
- Multi-language display for global operation
- Auto paralleling for higher power
- Active power factor correction (PFC)
- Standard LXI LAN, USB, and RS232 interfaces
- Optional EtherCAT and GPIB interface
- Full remote control via Virtual Panels™

Performance. Reliance. Brilliance.

The Sorensen™ Asterion® DC Series is the newest addition to the Asterion platform of power testing solutions. The new DC series features two types of product lines: fixed range and autoranging. The fixed range supplies are economical, traditional, rectangular wave output power supplies with all the enhanced operation advantages standard with the Asterion platform. The autoranging supplies feature expanded current and voltage range at the full output power level, enabling the ability to satisfy a wider testing need without requiring the purchase of additional models.

Maximize rack space utilization with leading DC power density in a 1U or 2U chassis. Autoranging models satisfy a wider testing need in a single power supply.

Quickly and expertly control the DC supply with intuitive touchscreen.

Cal Power
Via Acquanera, 29 22100 COMO
tel. 031.526.566 (r.a.) fax 031.507.984
info@calpower.it www.calpower.it

Control via Front Panel Touchscreen & Encoder Knob or available digital control interfaces

The Asterion AC Series is Digital Signal Processor (DSP) controlled and can be operated from the intuitive, easy-to-use front panel touchscreen or the Ethernet LXI, USB and RS232 standard control interfaces, as well as through the optional GPIB or EtherCAT control interface.

The touchscreen function group icons include a Dashboard, Output Programming Parameters, Measurements, Sequencing, Configuration, Control Interfaces, Applications, and System Settings. Function selection and parameter entry can be achieved either by direct selection from the touchscreen or by using the encoder selector button. The control resolution is adjusted by a dynamic rate change algorithm that combines the benefits of precise control over small parameter changes with quick sweeps through the entire range.

Applications

The Asterion DC Series is designed for testing today's complex electronics, including telecommunications and commercial electronics requiring low profile, light weight power supplies with high power density. Other applications include:

- Military and aerospace electronics test
- DC power simulation
- Commercial manufacturing and process control
- Research and development
- Automotive component and battery testing
- ATE applications

Autoranging Model Output Characteristic

The Asterion DC autoranging models have an output characteristic where the full rated output power is available at voltage and current ranges greater than the conventional rectangular output characteristic of fixed range power supplies. The output current versus output voltage follows a constant-power curve to provide users a wider current and voltage operating range in a single power supply.

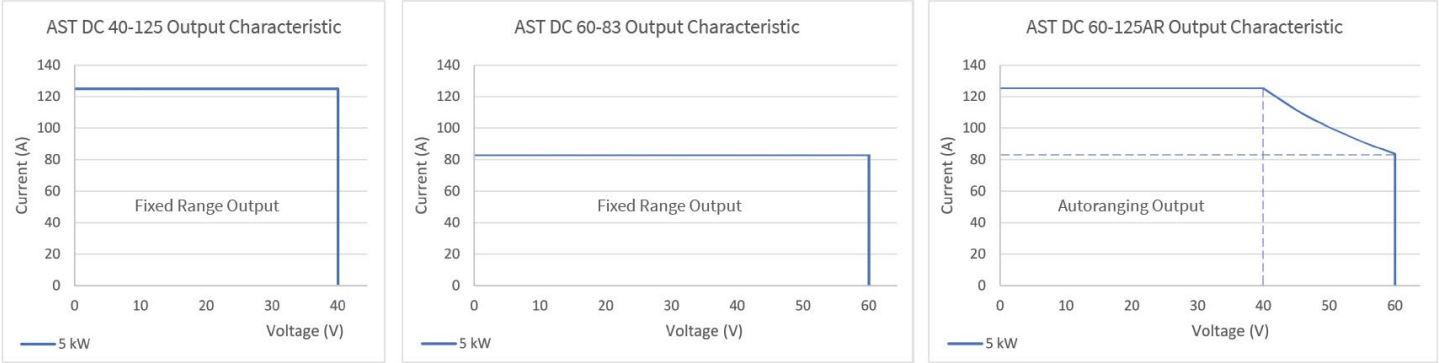

Figure 1 - Fixed Range vs Autoranging Output

Asterion DC Virtual Panels (Graphical User Interface)

Virtual Panels allow remote control of the Asterion DC power supply as well as programming communication and monitoring of the instrument without the front panel display. You can perform all operations via the remote Virtual Panels control as you could working directly with the unit's front panel.

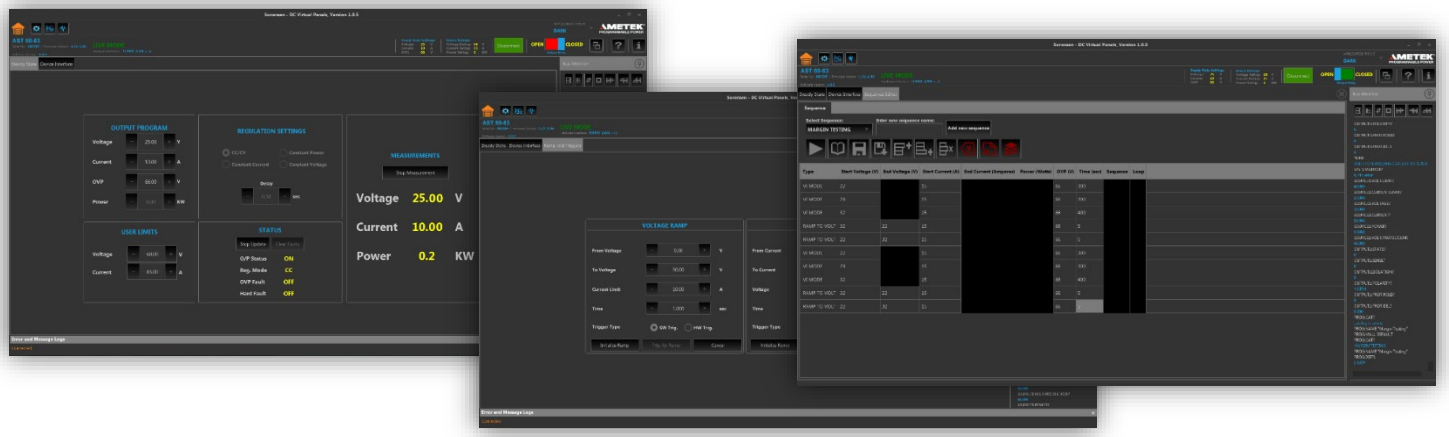

Virtual Panels "main status," "sequencing" and "output ramp" screens are shown.

Specifications

Asterion DC Output Specifications – 1.7 kW Fixed Range Models										
MODEL		**AST 40-42**	**AST 60-28**	**AST 80-22**	**AST 100-17**	**AST 150-12**	**AST 200-9**	**AST 300-6**	**AST 400-4.3**	**AST 600-2.8**
Rated Output Voltage	V	40	60	80	100	150	200	300	400	600
Rated Output Current	A	42	28	22	17	12	9	6	4.3	2.8
Rated Output Power	W	1700	1700	1700	1700	1700	1700	1700	1700	1700
Line Regulation	V	+/- 0.01% of rated voltage								
	A	+/- 0.05% of rated current								
Load Regulation	V	+/- 0.02% of rated voltage								
	A	+/- 0.15% of rated current								
Ripple RMS (20Hz-300kHz) c.v	mV	7	7	12	12	20	20	20	40	60
Output noise p-p (20Hz-20MHz) c.v	mV	60	60	75	75	75	100	120	300	300
Remote sense compensation		5% maximum of rated output voltage								
Temperature drift	PPM/C	100								
Stability		0.05% of output rating								

Asterion DC Output Specifications – 3.4 kW Fixed Range Models										
MODEL		**AST 40-85**	**AST 60-56**	**AST 80-43**	**AST 100-34**	**AST 150-23**	**AST 200-17**	**AST 300-11**	**AST 400-8.5**	**AST 600-5.7**
Rated Output Voltage	V	40	60	80	100	150	200	300	400	600
Rated Output Current	A	85	56	43	34	23	17	11	8.5	5.7
Rated Output Power	W	3400	3400	3400	3400	3400	3400	3400	3400	3400
Line Regulation	V	+/- 0.01% of rated voltage								
	A	+/- 0.05% of rated current								
Load Regulation	V	+/- 0.02% of rated voltage								
	A	+/- 0.15% of rated current								
Ripple RMS (20Hz-300kHz) c.v	mV	12	12	15	15	20	40	60	80	80
Output noise p-p (20Hz-20MHz) c.v	mV	75	75	90	90	120	150	200	300	350
Remote sense compensation		5% maximum of rated output voltage								
Temperature drift	PPM/C	100								
Stability		0.05% of output rating								

Asterion DC Output Specifications – 5 kW Fixed Range Models										
MODEL		**AST 40-125**	**AST 60-83**	**AST 80-63**	**AST 100-50**	**AST 150-34**	**AST 200-25**	**AST 300-17**	**AST 400-13**	**AST 600-8.3**
Rated Output Voltage	V	40	60	80	100	150	200	300	400	600
Rated Output Current	A	125	83	63	50	34	25	17	13	8.3
Rated Output Power	W	5000	5000	5000	5000	5000	5000	5000	5000	5000
Line Regulation	V	+/- 0.01% of rated voltage								
	A	+/- 0.05% of rated current								
Load Regulation	V	+/- 0.02% of rated voltage								
	A	+/- 0.15% of rated current								
Ripple RMS (20Hz-300kHz) c.v	mV	12	12	15	15	20	40	60	80	80
Output noise p-p (20Hz-20MHz) c.v	mV	75	75	90	90	120	150	200	300	350
Remote sense compensation		5% maximum of rated output voltage								
Temperature drift	PPM/C	100								
Stability		0.05% of output rating								

Asterion DC Output Specifications – 10 kW Fixed Range Models										
MODEL		**AST 40-250**	**AST 60-167**	**AST 80-125**	**AST 100-100**	**AST 150-67**	**AST 200-50**	**AST 300-34**	**AST 400-25**	**AST 600-16.7**
Rated Output Voltage	V	40	60	80	100	150	200	300	400	600
Rated Output Current	A	250	167	125	100	67	50	34	25	16.7
Rated Output Power	W	10000	10000	10000	10000	10000	10000	10000	10000	10000
Line Regulation	V	+/- 0.01% of rated voltage								
	A	+/- 0.05% of rated current								
Load Regulation	V	+/- 0.02% of rated voltage								
	A	+/- 0.15% of rated current								
Ripple RMS (20Hz-300kHz) c.v	mV	12	12	15	15	20	40	60	80	80
Output noise p-p (20Hz-20MHz) c.v	mV	75	75	90	90	120	150	200	300	350
Remote sense compensation		5% maximum of rated output voltage								
Temperature drift	PPM/C	100								
Stability		0.05% of output rating								

Asterion DC Output Specifications – 1.7 kW and 3.4 kW Autoranging Models														
MODEL		**AST 60-42AR**	**AST 40-85AR**	**AST 60-56AR**	**AST 80-43AR**	**AST 200-17AR**	**AST 400-6AR**	**AST 600-6AR**	**AST 40-125AR**	**AST 60-85AR**	**AST 80-63AR**	**AST 200-34AR**	**AST 400-12AR**	**AST 600-8AR**
Rated Output Voltage	V	60	40	60	80	200	400	600	40	60	80	200	400	600
Rated Output Current	A	42	85	56	43	17	6	5.7	125	85	63	34	12	8.3
Rated Output Power	W	1700	1700	1700	1700	1700	1700	1700	3400	3400	3400	3400	3400	3400
Line Regulation	V	+/- 0.01% of rated voltage												
	A	+/- 0.05% of rated current												
Load Regulation	V	+/- 0.02% of rated voltage												
	A	+/- 0.15% of rated current												
Ripple RMS (20Hz-300kHz) c.v	mV	12	12	12	15	20	40	60	12	12	15	40	80	80
Output noise p-p (20Hz-20MHz) c.v	mV	75	75	75	90	100	300	300	75	75	90	150	300	350
Remote sense compensation		5% maximum of rated output voltage												
Temperature drift	PPM/C	100												
Stability		0.05% of output rating												

Asterion DC Output Specifications – 5 kW and 10 kW Autoranging Models							
MODEL		**AST 60-125AR**	**AST 200-50AR**	**AST 400-18AR**	**AST 60-250AR**	**AST 200-100AR**	**AST 400-34AR**
Rated Output Voltage	V	60	200	400	60	200	400
Rated Output Current	A	125	50	18	250	100	34
Rated Output Power	W	5000	5000	5000	10000	10000	10000
Line Regulation	V	+/- 0.01% of rated voltage					
	A	+/- 0.05% of rated current					
Load Regulation	V	+/- 0.02% of rated voltage					
	A	+/- 0.08% of rated current					
Ripple RMS (20Hz-300kHz) c.v	mV	12	40	80	12	40	80
Output noise p-p (20Hz-20MHz) c.v	mV	75	150	300	75	150	300
Remote sense compensation		5% maximum of rated output voltage					
Temperature drift	PPM/C	100					
Stability		0.05% of output rating					

Programming & Readback (Front Panel or Remote Digital Interface)	
Voltage Output programming accuracy	+/- 0.1% of rated output voltage
Current Output programming accuracy	+/- 0.2% of rated output current
Power Output programming accuracy	+/- 0.3% of rated output power
Overvoltage programming accuracy	±1%, maximum, of rated output voltage
Voltage Output programming resolution	0.012% of full scale
Current Output programming resolution	0.012% of full scale
Power Output t programming resolution	0.012% of full scale
Overvoltage programming resolution	0.1% of full scale
Voltage Output readback accuracy	+/- 0.1% of rated output voltage
Current Output readback accuracy	+/- 0.2% of rated output current
Pout readback accuracy	+/- 0.3% of rated output power
Voltage Output readback resolution	0.012% of full scale
Current Output readback resolution	0.012% of full scale
Power Output readback resolution	0.012% of full scale
Overvoltage Response time	20 ms

1.7 kW and 3.4 kW Output Transient Specifications									
	Rated Voltage (V)								
	40 V	**60 V**	**80 V**	**100 V**	**150 V**	**200 V**	**300 V**	**400 V**	**600 V**
Voltage Rise Time[1] (ms), Full load	20	20	25	25	50	75	100	100	150
Voltage Fall Time[2] (ms), Full load	50	50	60	60	120	150	200	200	200
Voltage Fall Time[3] (ms), No load	1200	1500	2600	2600	2900	3500	4600	4600	4800
Transient response[4] (ms)	1	1	1	2	2	2	2	2	2

1) Maximum time, from 0-100% of programming change from zero to rated output voltage with rated resistive load. Current rise time is same as the voltage rise time

2) Maximum time, from 100%-0 of programming change from rated output voltage to zero with rated resistive load. Current fall time is same as the voltage fall time

3) Maximum time, from 100%-0 of programming change from rated output voltage to zero with No load

4) Typical time to recover within 0.5% of rated output voltage for load step change 10-90% of rated output current

5 kW and 10 kW Output Transient Specifications									
	Rated Voltage (V)								
	40 V	60 V	80 V	100 V	150 V	200 V	300 V	400 V	600 V
Voltage Rise Time[1] (ms), Full load	30	50	50	50	50	50	50	75	100
Voltage Fall Time[2] (ms), Full load	80	80	100	100	100	100	100	150	150
Voltage Fall Time[3] (ms), No load	900	1000	1900	1900	2000	2500	3000	3000	3200
Transient response[4] (ms)	1	1	1	2	2	2	2	2	2

1) Maximum time, from 0-100% of programming change from zero to rated output voltage with rated resistive load. Current rise time is same as the voltage rise time

2) Maximum time, from 100%-0 of programming change from rated output voltage to zero with rated resistive load. Current fall time is same as the voltage fall time

3) Maximum time, from 100%-0 of programming change from rated output voltage to zero with No load

4) Typical time to recover within 0.5% of rated output voltage for load step change 10-90% of rated output current

1.7 kW and 3.4 kW Autoranging Output Transient Specifications						
	Rated Voltage (V)					
	40 V	60 V	80 V	200 V	400 V	600 V
Voltage Rise Time[1] (ms), Full load	20	20	25	75	100	150
Voltage Fall Time[2] (ms), Full load	50	50	60	150	200	200
Voltage Fall Time[3] (ms), No load	1200	1500	2600	3500	4600	4800
Transient response[4] (ms)	1	1	1	2	2	2

1) Maximum time, from 0-100% of programming change from zero to rated output voltage with rated resistive load. Current rise time is same as the voltage rise time

2) Maximum time, from 100%-0 of programming change from rated output voltage to zero with rated resistive load. Current fall time is same as the voltage fall time

3) Maximum time, from 100%-0 of programming change from rated output voltage to zero with No load

4) Typical time to recover within 0.5% of rated output voltage for load step change 10-90% of rated output current

5 kW and 10 kW Autoranging Output Transient Specifications			
	Rated Voltage (V)		
	60 V	200 V	400 V
Voltage Rise Time[1] (ms), Full load	50	50	75
Voltage Fall Time[2] (ms), Full load	80	100	150
Voltage Fall Time[3] (ms), No load	1000	2500	3000
Transient response[4] (ms)	1	2	2

1) Maximum time, from 0-100% of programming change from zero to rated output voltage with rated resistive load. Current rise time is same as the voltage rise time

2) Maximum time, from 100%-0 of programming change from rated output voltage to zero with rated resistive load. Current fall time is same as the voltage fall time

3) Maximum time, from 100%-0 of programming change from rated output voltage to zero with No load

4) Typical time to recover within 0.5% of rated output voltage for load step change 10-90% of rated output current

Remote Control Digital Interfaces	
LAN	Ethernet 10BASE-T and 100BASE-T over twisted-pair cables compliant with IEEE 802.3; Connector: 8P8C modular jack.
RS-232	Serial interface compliant to RS-232C; Protocol: data bits, 7 with parity and 8 without parity; stop bits, 2; baud rate, 9600 to 115200; handshake, CTS and RTS; Connector: Subminiature-D, 9-contact receptacle.
USB	Serial interface compliant to USB 2.0; Connector: Type-B receptacle.
ECAT-3 (Option)	EtherCAT (Ethernet for Control Automation Technology) is an Ethernet-based fieldbus system. The protocol is standardized in IEC 61158 and is suitable for both hard and soft real-time computing requirements in automation technology.
IEEE-488 (Option)	Parallel interface complies with IEEE-488.1, IEEE-488.2, and the SCPI command specification; command execution response time, 10 ms, typical; connector: IEEE-488.1 compliant.

Unit Protection	
Output Overvoltage Protection (OVP)	Programmable to 110% of full-scale output voltage, exceeding OVP threshold results in shutdown of output.
Output Current Limit Protection	User-selectable fold back mode CV/CC/CP or CV or CC or CP modes.
	In CV/CC/CP mode, output current or power is regulated to setpoint on reaching limit.
	In CV mode, on reaching current or power limits results in shutdown of output.
	In CC mode, on reaching voltage or power limits results in shutdown of output.
	In CP mode, on reaching voltage or current limits results in shutdown of output.
	In CV or CC or CP mode, shutdown delay on reaching the limit is programmable from 100 ms to 5 s.
AC Input Overcurrent Protection	Internal fuses in each phase for fault isolation; not user replaceable.
AC Input Undervoltage Protection	Automatic shutdown for insufficient AC input voltage.
AC Input Transient Protection	Protection to withstand EN61326-1, Class-A surge levels.
Overtemperature Protection (OTP)	Internal temperature monitors cause shutdown of output if temperature thresholds are exceeded.

AC Input Specifications	
Input Voltage, Nominal Rating	1-Phase line-neutral: • Low Input Range: 100 VAC-132 VAC • High Input Range: 200 VAC-240 VAC or 1-Phase / 3-Phase Line-Line: 200 VAC-240 VAC (**Option C**) 3-Phase Line-Line: 380/400/415 VAC (**Option D**) 3-Phase Line-Line: 380/400/415/440/480 VAC (**Option E**)
Input Voltage, Operating Range	1-Phase line-neutral: • Low Input Range: 90-145 VAC • High Input Range: 180 VAC-264 VAC high input range or 1-Phase / 3-Phase line-line: 90 VAC-264 VAC (**Option C**) 3-Phase line-line: 342 VAC-456 VAC (**Option D**) 3-Phase line-line: 342 VAC-528 VAC (**Option E**)
Current[1], maximum per phase	**1-Phase line-neutral:** 20 A (RMS) at 90-145 VAC, 23 A (RMS) at 180-200 VAC, 20 A (RMS) at 200-264 VAC. Refer to User Manual for output power derating characteristics with AC input voltage.
	3-Phase line-line: 35 A (RMS) per phase at 180-264 VAC, 20 A (RMS) per phase at 342-440 VAC, 17 A (RMS) per phase at 432-528 VAC. Refer to User Manual for output power derating characteristics with AC input voltage.
Input Frequency, Nominal Rating	50 Hz, 60 Hz
Input Frequency Range	47-63 Hz
Efficiency[1], typical	89% for 1.7 kW models
	91% for 3.4 kW, 5 kW, and 10 kW models
Power Factor[2], typical	0.98 for single-phase high range and 0.94 for 3-phase input

AC Input Specifications	
Hold-Up Time[3], typical	≥ 10 ms
Inrush Current, typical[4]	≤ 50 A
1-PH Input Connections (1.7 kW to 5 kW models only)	2 wires + ground, 264 VAC, maximum line-neutral or line-line
3-PH Input Connections	3 wires + ground, delta configuration, 264 VAC maximum line-to-line 4 wires + ground, wye configuration, 457 VAC maximum line-to-line
Isolation Voltage	1500 VAC primary to earth, 3000 VAC on primary to SELV and Hazardous secondary to SELV isolation barriers

1) Typical Value, at full load, with 200/400VAC Input voltage

2) At full load and with 200/400VAC input voltage, 50/60 Hz input frequency

3) Typical Value, At full load and with nominal AC input voltage, 50/60 Hz input frequency

Output Power Derating Characteristics with AC Input Voltage				
Rated Output Power	1-Phase Low Input Range	1-Phase High Input Range	1-Phase High Input Range	3-Phase
	90 -145 VAC	180-200 VAC	200-264 VAC	180-264 VAC or 342-457 VAC
1.7 kW	1.2 kW[1]	1.7 kW	1.7 kW	1.7 kW
3.4 kW	1.2 kW[1,3]	3.0 kW[3]	3.4 kW	3.4 kW
5.0 kW	1.7 kW	3.4 kW	3.4 kW[2]	5.0 kW
10.0 kW	NA	NA	NA	10.0 kW

1) 1.7 kW if unit is powered by greater than or equal to 20 A and ambient does not exceed 40°C.

2) 5 kW if unit is powered by greater than or equal to 30 A and ambient does not exceed 40°C.

3) For 3.4kW performance at single phase operation for 90-145Vac or 180-200Vac limits, contact to factory for more details.

Mechanical Specifications	
Dimensions	1.7 kW to 5 kW models: H, 1.75” (44.45 mm); W (front panel), 19.0” (483 mm); D, 23.0” (584 mm); H, 1.75” (44.45 mm); W (chassis), 16.9” (483 mm); D, 23.0” (584 mm). 10 kW models: H, 3.47” (88.1 mm); W (front panel), 19.0” (483 mm); D, 23.0” (584 mm); H, 3.47” (88.1 mm); W (chassis), 16.9” (429.2 mm); D, 23.0” (584 mm).
Unit Weight	1.7 kW to 5 kW models: 28 lbs (12.7 kg) 10 kW models: 42 lbs (20.5 kg)
Shipping Weight	1.7 kW to 5 kW models: 34 lbs (15.4 kg) 10 kW models: 60 lbs (27.2 kg)
Chassis Material	Steel with plastic front panel
Chassis Finish	Galvanized Zinc, G90

Environmental Specifications	
Operating Temp	0° to +50° C
	+32° to +122° F
Storage Temp	-30° to +85 °C
	-22° to +185° F
Operating Humidity	20-90 %, non-condensing
Storage Humidity	10-95 %, non-condensing
Altitude	3000 m (10,000 ft), output current derating 2%/100 m or Tambient 1ºC/100 m above 2000 m
Cooling	Force-air cooling; linear, variable fan speed control; air intake at front/sides and exhaust at rear
Vibration	MIL-PRF-28800F, Class 3; 5-500 Hz per Paragraph 4.5.5.3.1
Shock	MIL-PRF-28800F, Class 3; 30G half-sine with 11ms duration per Paragraph 4.5.5.4.1
Transportation Integrity	ISTA Test Procedure 1A
Regulatory Agency Compliance	
EMC	CE marked for EMC Directive 2014/30/EU per EN61326-1:2013, Class-A for emissions and immunity as required for the EU CE mark
Safety	CSA NRTL certified for US and Canada to CAN/CSA-C22.2 No. 61010-1-12, UL 61010-1 Third Edition. CE marked for LVD compliance 2014/35/EU to EN 61010-1 Third Edition as required for the EU CE mark
CE Mark LVD Categories	Installation Overvoltage Category: II; Pollution Degree: 2; Class II equipment; indoor use only
RoHS	CE marked for compliance with EU Directive 2015/863/EU for Restriction of Hazardous Substances in Electrical and Electronic Equipment

Chassis Dimension Drawings (1U)

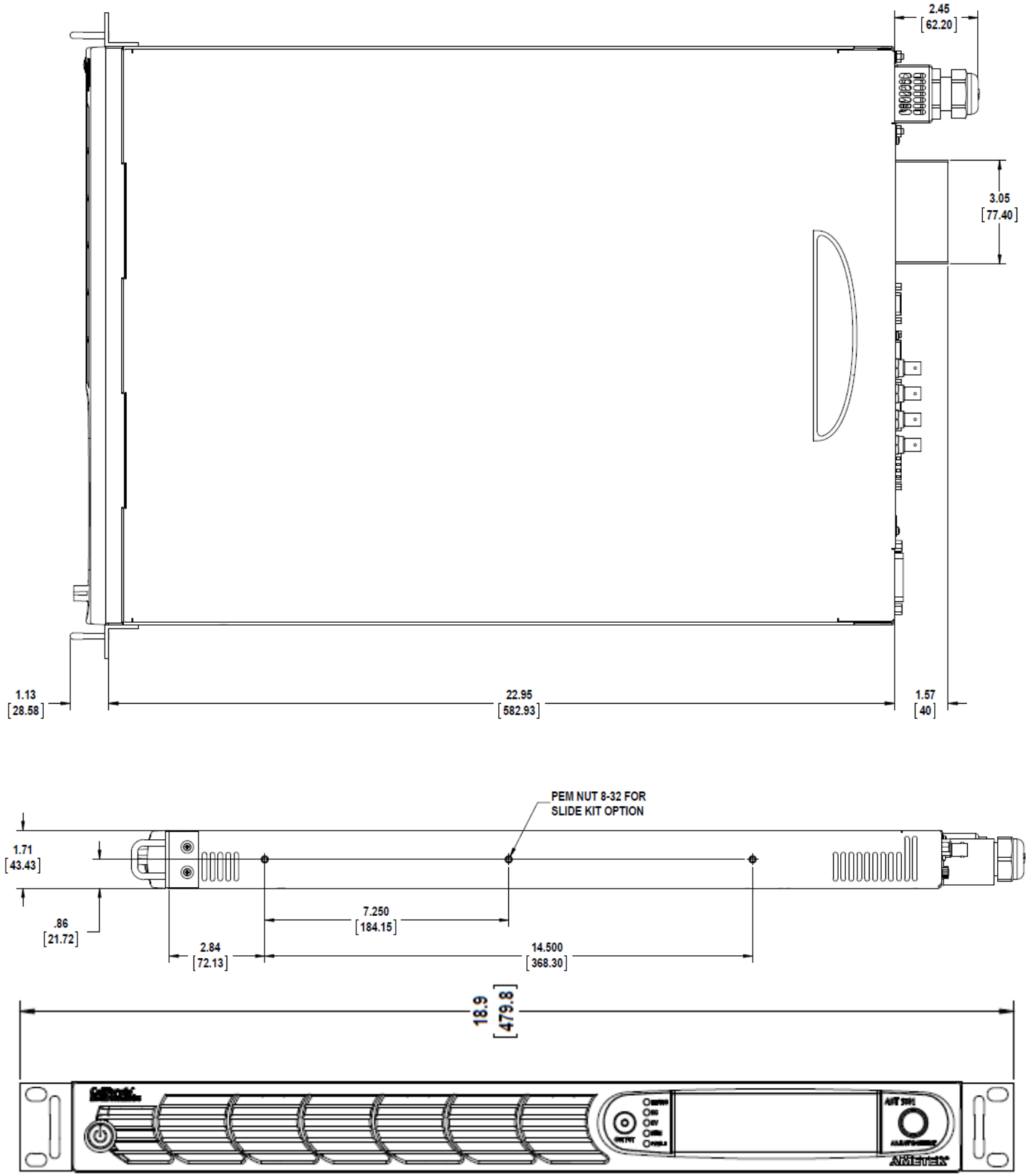

Chassis Dimension Drawings (2U)

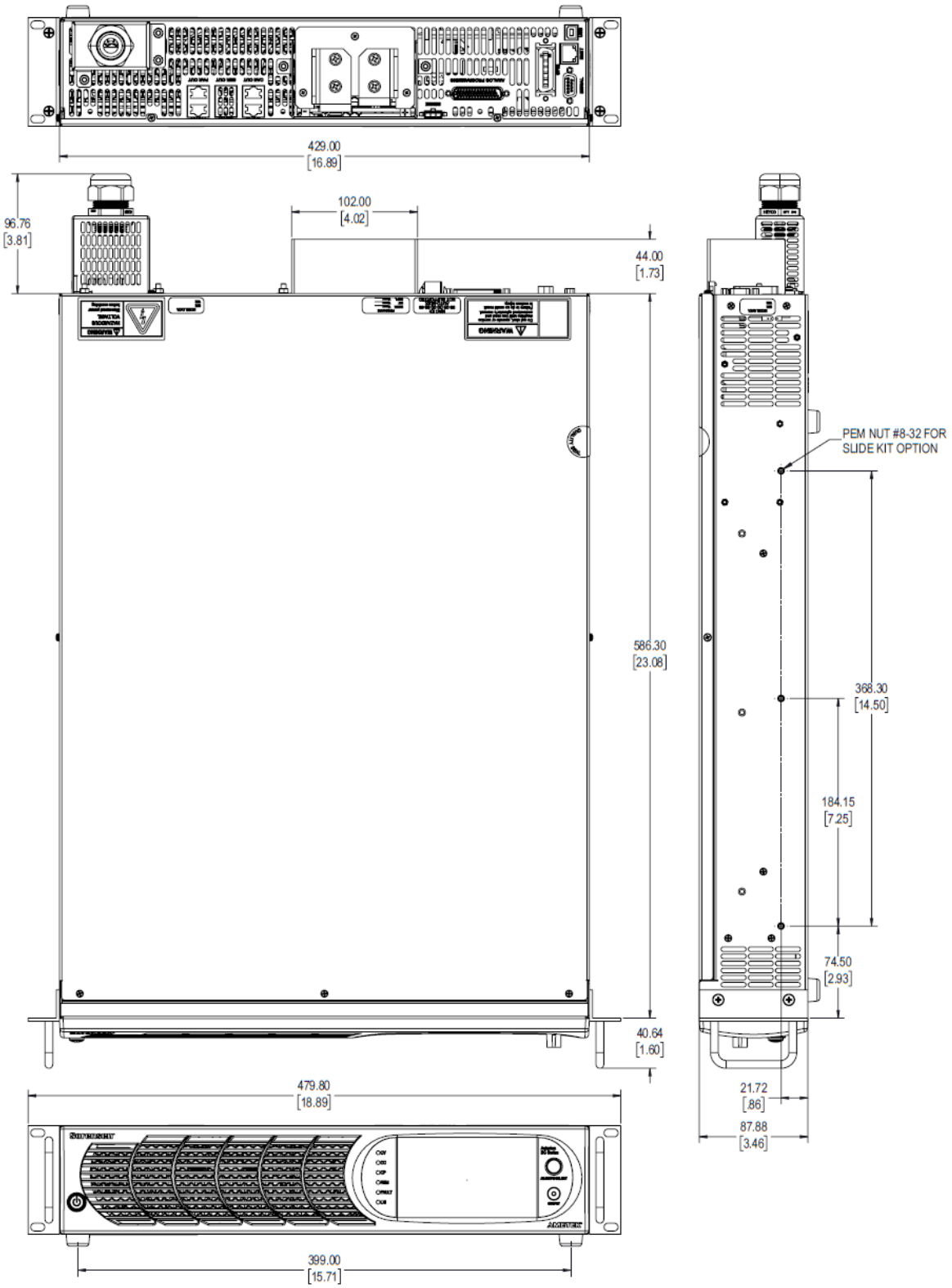

Installation Drawing, Enhanced Front Panel Version, Asterion DC Series 2U Models

Chassis Dimension Drawings (2U)

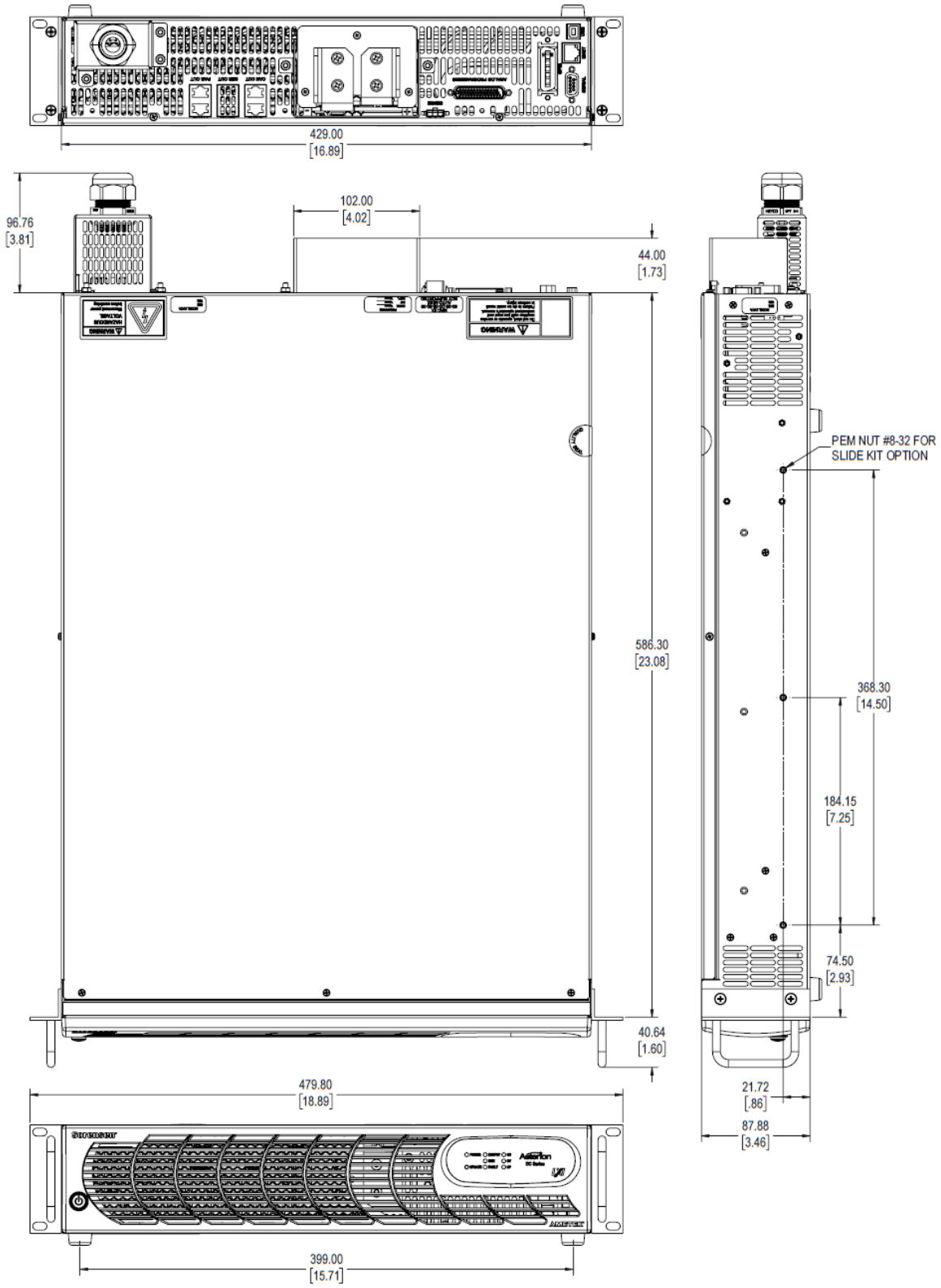

Installation Drawing, Asterion DC Series 2U Models

Options & Order Information

Option	Description
Interface options	**NOTES**
0	None
1	GPIB Interface
2	EtherCAT
Additional Options	**NOTES**
X	None
0	Non-Isolated Analog Control, Not Available on 10kW, 2U Models
1	Isolated Analog Control, All Models
ACCESSORIES	**NOTES**
5330201-01R	Rack Slides (1 pair)
890-524-01	Paralleling/Series Cable - *Note: 2 cables are required to parallel/series 2 units
AST-Z540	ANSI Z540 Certified Calibration
AST-17025	ISO 17025 Certified Calibration

Model Number Description:

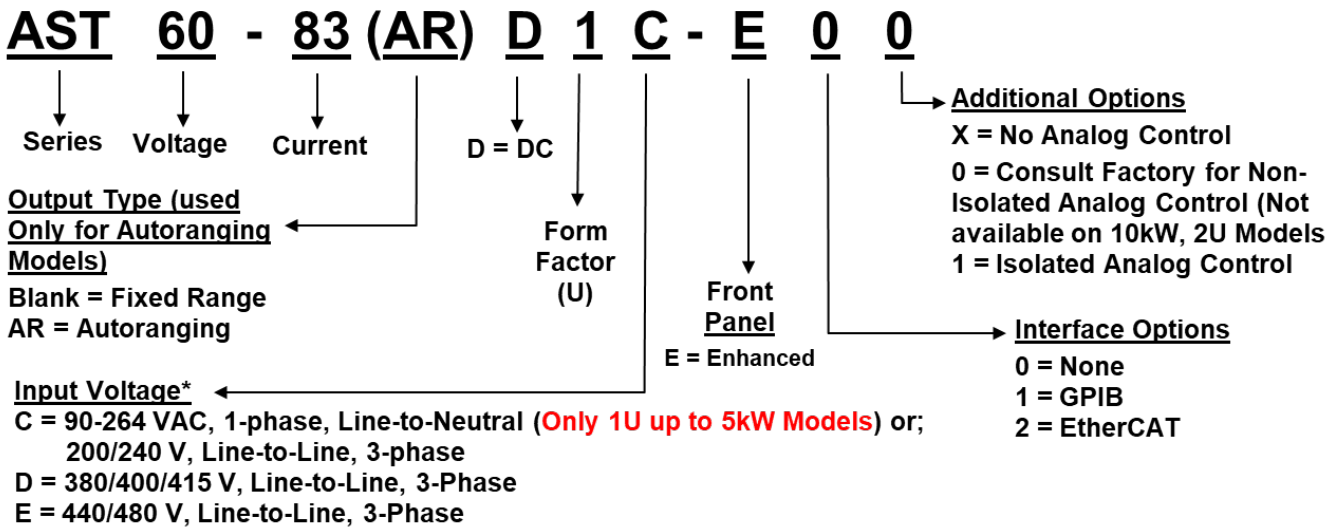

*** Note: See user manual for output power derating vs input voltage.**

Warranty Statement:

AMETEK Programmable Power Inc. warrants its products to be free from defects in material and workmanship. The warranty period is from the date of original shipment of the product to the original purchaser (see website for warranty periods by product). Asterion DC comes with a **five (5)** year warranty. Extended warranties available.

Cal Power
Via Acquanera, 29 22100 COMO
tel. 031.526.566 (r.a.) fax 031.507.984
info@calpower.it www.calpower.it

Note: All specifications subject to change without notice.