Cal Power
Via Acquanera, 29 22100 COMO
tel. 031.526.566 (r.a.) fax 031.507.984
info@calpower.it www.calpower.it

FLUKE Calibration

5128A

RHapid-Cal Humidity Generator

Operators Manual

December 2016

LIMITED WARRANTY AND LIMITATION OF LIABILITY

Each Fluke product is warranted to be free from defects in material and workmanship under normal use and service. The warranty period is one year and begins on the date of shipment. Parts, product repairs, and services are warranted for 90 days. This warranty extends only to the original buyer or end-user customer of a Fluke authorized reseller, and does not apply to fuses, disposable batteries, or to any product which, in Fluke's opinion, has been misused, altered, neglected, contaminated, or damaged by accident or abnormal conditions of operation or handling. Fluke warrants that software will operate substantially in accordance with its functional specifications for 90 days and that it has been properly recorded on non-defective media. Fluke does not warrant that software will be error free or operate without interruption.

Fluke authorized resellers shall extend this warranty on new and unused products to end-user customers only but have no authority to extend a greater or different warranty on behalf of Fluke. Warranty support is available only if product is purchased through a Fluke authorized sales outlet or Buyer has paid the applicable international price. Fluke reserves the right to invoice Buyer for importation costs of repair/replacement parts when product purchased in one country is submitted for repair in another country.

Fluke's warranty obligation is limited, at Fluke's option, to refund of the purchase price, free of charge repair, or replacement of a defective product which is returned to a Fluke authorized service center within the warranty period.

To obtain warranty service, contact your nearest Fluke authorized service center to obtain return authorization information, then send the product to that service center, with a description of the difficulty, postage and insurance prepaid (FOB Destination). Fluke assumes no risk for damage in transit. Following warranty repair, the product will be returned to Buyer, transportation prepaid (FOB Destination). If Fluke determines that failure was caused by neglect, misuse, contamination, alteration, accident, or abnormal condition of operation or handling, including overvoltage failures caused by use outside the product's specified rating, or normal wear and tear of mechanical components, Fluke will provide an estimate of repair costs and obtain authorization before commencing the work. Following repair, the product will be returned to the Buyer transportation prepaid and the Buyer will be billed for the repair and return transportation charges (FOB Shipping Point).

THIS WARRANTY IS BUYER'S SOLE AND EXCLUSIVE REMEDY AND IS IN LIEU OF ALL OTHER WARRANTIES, EXPRESS OR IMPLIED, INCLUDING BUT NOT LIMITED TO ANY IMPLIED WARRANTY OF MERCHANTABILITY OR FITNESS FOR A PARTICULAR PURPOSE. FLUKE SHALL NOT BE LIABLE FOR ANY SPECIAL, INDIRECT, INCIDENTAL, OR CONSEQUENTIAL DAMAGES OR LOSSES, INCLUDING LOSS OF DATA, ARISING FROM ANY CAUSE OR THEORY.

Since some countries or states do not allow limitation of the term of an implied warranty, or exclusion or limitation of incidental or consequential damages, the limitations and exclusions of this warranty may not apply to every buyer. If any provision of this Warranty is held invalid or unenforceable by a court or other decision-maker of competent jurisdiction, such holding will not affect the validity or enforceability of any other provision.

Fluke Corporation	Fluke Europe B.V.
P.O. Box 9090	P.O. Box 1186
Everett, WA 98206-9090	5602 BD Eindhoven
U.S.A.	The Netherlands

11/99

Table of Contents

Introduction

The Fluke Calibration 5128A RHapid-Cal Humidity Generator (the Product) is a precision-controlled humidity generator that produces a precise test environment to calibrate humidity sensors. Use the front-panel to control the current temperature and humidity in the chamber.

The Product:

- Controls and maintains the relative humidity and temperature in the chamber to within a resolution of 0.1 % RH and 0.1 °C respectively.
- Has extremely fast response times for changes in humidity and temperature, with ramp times as fast as 10 % RH/minute and 10 °C/minute.
- Has different door styles to accommodate a variety of humidity sensors.
- Features a simple front-panel user interface and USB Type-B connector for remote operation.

Contact Fluke Calibration

To contact Fluke Calibration, call one of the following telephone numbers:

- Technical Support USA: 1-877-355-3225
- Calibration/Repair USA: 1-877-355-3225
- Canada: 1-800-36-FLUKE (1-800-363-5853)
- Europe: +31-40-2675-200
- Japan: +81-3-6714-3114
- Singapore: +65-6799-5566
- China: +86-400-810-3435
- Brazil: +55-11-3759-7600
- Anywhere in the world: +1-425-446-6110

To see product information or download manuals and the latest manual supplements, visit Fluke Calibration's website at www.flukecal.com.

To register your product, visit http://flukecal.com/register-product.

Safety Information

A **Warning** identifies conditions and procedures that are dangerous to the user. A **Caution** identifies conditions and procedures that can cause damage to the Product or the equipment under test.

⚠⚠Warning

To prevent possible electrical shock, fire or personal injury:

- **Read all safety information before you use the Product.**
- **Carefully read all instructions.**
- **Do not use the Product around explosive gas, vapor, or in damp or wet environments.**
- **Use this Product indoors only.**
- **Do not tilt the Product with water in the reservoir. Product must be installed on a flat stable horizontal surface.**

- **Use only the mains power cord and connector approved for the voltage and plug configuration in your country and rated for the Product.**
- **Replace the mains power cord if the insulation is damaged or if the insulation shows signs of wear.**
- **Make sure the ground conductor in the mains power cord is connected to a protective earth ground. Disruption of the protective earth could put voltage on the chassis that could cause death.**
- **Use the Product only as specified, or the protection supplied by the Product can be compromised.**
- **Do not put the Product where access to the mains power cord is blocked.**
- **Do not use the Product if it is damaged.**
- **Disable the Product if it is damaged.**
- **Do not use the Product if it operates incorrectly.**
- **Do not operate the Product with covers removed or the case open. Hazardous voltage exposure is possible.**
- **Use only specified replacement parts.**
- **Use only specified replacement fuses.**
- **Have an approved technician repair the Product.**
- **Empty the reservoir before shipping the Product.**
- **Do not overfill the reservoir.**

For safe operation and maintenance of the Product:

- **Turn off the Product and remove the mains power cord. Stop for 2 minutes to let the internal circuits discharge before you open the fuse door or remove Product covers.**

Symbols

The symbols used in this manual and on the Product are shown in Table 1.

Table 1. Symbols

Symbol	Description
	WARNING. HAZARDOUS VOLTAGE. Risk of electric shock.
	WARNING. RISK OF DANGER.
	Consult user documentation.
	Certified by CSA Group to North American safety standards.
	Conforms to European Union directives.
	Conforms to relevant Australian EMC standards.
	Fuse
	Conforms to relevant South Korean EMC Standards.
	This product complies with the WEEE Directive marking requirements. The affixed label indicates that you must not discard this electrical/electronic product in domestic household waste. Product Category: With reference to the equipment types in the WEEE Directive Annex I, this product is classed as category 9 "Monitoring and Control Instrumentation" product. Do not dispose of this product as unsorted municipal waste.

Calibration and Repair Information

If calibration or repair is necessary during the warranty period, contact an authorized Fluke Calibration Service Center to arrange for repair (see *Contact Fluke Calibration*). Have the Product information ready such as the purchase date and serial number to schedule the repair.

General Specifications

AC mains voltage	100 V to 240 V ±10 %, 47 to 63 Hz
Power consumption	300 VA
Required test fluid	Distilled water
Warm-up period to meet specifications	Twice the time since last warmed up, to a maximum of 30 minutes
Internal humidifier warm-up period (time for “HEATING” to go off)	30 minutes (Typical)
Mains Fuse Rating	F 4A 250 V (fast blow)
Operating ambient relative humidity range, 18 °C to 28 °C	Up to 80 % RH
Storage temperature and relative humidity	-20 °C to 50 °C, 0 % to 95 % RH, non-condensing
Transducer Power Output	12 V dc, 1 A maximum, fuse: F 1A 250V (fast blow)
Computer Interface…	USB
Safety	IEC 61010-1, Installation Category II, Pollution degree 2, Indoor use only
Altitude	2000 m

Electromagnetic Compatibility (EMC)

International	IEC 61326-1: Controlled Electromagnetic Environment CISPR 11: Group 1, Class A *Group 1: Equipment has intentionally generated and/or uses conductively-coupled radio frequency energy that is necessary for the internal function of the equipment itself.* *Class A: Equipment is suitable for use in all establishments other than domestic and those directly connected to a low-voltage power supply network that supplies buildings used for domestic purposes. There may be potential difficulties in ensuring electromagnetic compatibility in other environments due to conducted and radiated disturbances.* *Caution: This equipment is not intended for use in residential environments and may not provide adequate protection to radio reception in such environments.* *Emissions that exceed the levels required by CISPR 11 can occur when the equipment is connected to a test object.*
Korea (KCC)	Class A Equipment (Industrial, Broadcasting, & Communication Equipment) *Class A: Equipment meets requirements for industrial electromagnetic wave equipment and the seller or user should take notice of it. This equipment is intended for use in business environments and not to be used in homes.*
USA (FCC)	47 CFR 15 subpart B. This product is considered an exempt device per clause 15.103.

Weight

Chassis only	15 kg (33 lbs)

Dimensions

Chassis	237 mm x 432 mm x 521 mm (9.3 in x 17 in x 20.5 in) (height x width x depth)
Overall Chamber Dimensions	200 mm (7.87 in) (depth) x 150 mm (5.90 in) (diameter)
Working Volume Dimensions	109 mm (4.3 in) (depth) x 125 mm (4.88 in) (diameter)

Temperature resolution:

Display	0.1 °C
USB data	0.1 °C

Humidity resolution:

Display	0.1 % RH
USB data	0.1 % RH

Dew Point

Resolution	0.1 °C (for indication only)

Note

The displayed dew point reading (DP) is calculated from the Product's actual temperature and %RH readings. It is calculated as a dew point (water vapor over water) over the entire range, regardless if dew point is equal to or lower than 0 °C, and at a nominal pressure of 101.325 kPa (1 atmosphere).

Humidity and Temperature Chamber Technical Specifications

The Product specifications describe the Absolute Instrumental Uncertainty of the Product. The Product specifications include stability, ambient temperature, and humidity (within specified limits), linearity, line regulation, the reference standard measurement uncertainty and long term stability of one year. The product specifications are provided at a 99 %, k=2.58, normally distributed level of confidence.

Chamber Specifications

One Year, Ambient Temperature Range 23 °C ±3 °C [1]			
Chamber Temperature Range	**Chamber Humidity Range**	**Humidity Specification**	**Temperature Specification**
18 °C to 23 °C	7 % to 80 % RH >80 % to 95 % RH	±1.0 % RH ±1.25 % RH	±0.2 °C ±0.2 °C
>23 °C to 28 °C	7 % to 80 % RH >80 % to H_{max}[2] % RH	±1.0 % RH ±1.25 % RH	±0.2 °C ±0.2 °C

[1] For ambient temperature range of 23°C ±5°C, multiply the specifications by 1.5.
[2] H_{max} is the maximum humidity value at which the specification applies. See Chamber Operational Range below for H_{max}.

Note

Specifications apply to the Working Volume shown in the Working Volume Template found at the end of the Operators Manual, and are referenced to the "Actual" reading on the Product display.

Chamber Uniformity and Stability

Ambient Temperature Range: 23 °C ±3 °C [1]						
Chamber Temperature	**Chamber Humidity Range**		**Chamber Temperature Uniformity [2]**	**Chamber Humidity Uniformity [2]**	**Chamber Humidity Stability [3]**	**Chamber Temperature Stability [3]**
	Min % RH	**Max % RH**				
18 °C to 28 °C	7 % RH	See Chamber Operational Range Below	±0.12 °C	±0.3 % RH	±0.1 % RH	±0.05 °C
The following specifications are typical for chamber conditions shown [4]						
5 °C to <18 °C	15 % RH	See Chamber Operational Range Below	±0.5 °C	±1.5 % RH	±0.5 % RH	±0.5 °C
>28 °C to 30 °C	7 % RH		±0.2 °C	±0.6 % RH	±0.3 % RH	±0.2 °C
>30 °C to 35 °C	7 % RH		±0.3 °C	±0.9 % RH	±0.4 % RH	±0.3 °C
>35 °C to 40 °C	7 % RH		±0.5 °C	±1.5 % RH	±0.5 % RH	±0.5 °C
>40 °C to 50 °C	7 % RH		±0.5 °C	±1.5 % RH	±0.5 % RH	±0.5 °C

[1] For ambient temperature range of 23°C ±5°C, multiply the specifications by 1.5.
[2] Defined as the uniformity of the Working Volume.
[3] Defined as 1-sigma standard deviation of measurement readings over a 5-minute span.
[4] Chamber humidity uniformity is listed for mid-level humidity settings. Lower humidity settings will give better uniformity while higher humidity settings will give worse uniformity.

Chamber Operational Range – Maximum % RH

The chamber has operational range limits based on temperature and humidity settings. The table below shows the maximum % RH attainable at different temperatures.

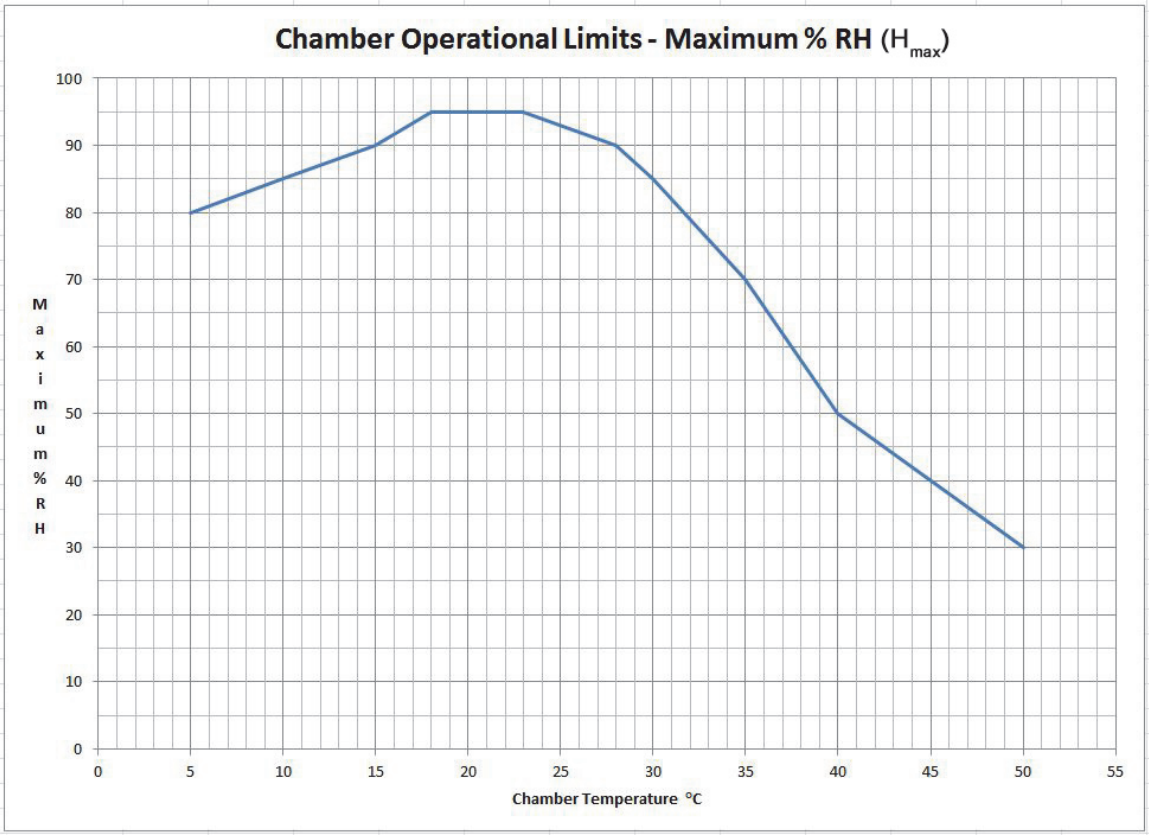

Operational Specifications

Temperature rate of change – down ..... 1.5 °C/minute (Typical)

Temperature rate of change – up ..... 10 °C/minute (Typical)

Humidity rate of change – down ..... 5 % RH/minute (Typical)

Humidity rate of change – up..... 10 % RH/minute (Typical)

Product Setup

The subsequent sections explain Product inspection, placement, and setup.

Unpack and Inspect

Unpack the Product carefully and examine it for damage that could have occurred during shipment. If there is shipping damage, contact Fluke Calibration and the postal carrier immediately. Table 2 lists the equipment and the accessories that come with the Product. Make sure that all the items are in the box.

Table 2. Shipping Contents

Name	Quantity
Mains Power Cord 2-meter (6-foot)	1
5128A Safety Information (multi-language)	1
Report of Calibration and calibration label	1
Fill syringe with extension tube	1
Five-port square chamber door	1 (installed on the Product)
Port plug	5 (installed on each probe port)
Silicone Unit Under Test (UUT) grommets, ¼ in, ½ in, ¾ in, 1 in	One of each size, 4 in total
Desiccant cartridge	1 (installed inside the Product)
USB Cable (Type A to Type B)	1

Product Placement

Put the Product on a clean, flat surface. For best results, choose a location where room temperature changes are minimal. Make sure that there is at least 100 mm (4 in) clearance at the back of the Product for adequate air flow.

⚠Caution

To avoid damage to the Product, only use it in its horizontal position. When in use, if the Product is tilted more than 10 degrees from horizontal, water can leak from the internal humidifier.

Fill the Product with Distilled Water

Before the Product is connected to mains power (see *Mains Voltage*), fill the Product with 50 ml to 60 ml of clean, distilled water (see Figure 1).

1. Remove the fill cap from the front panel (see *Front Panel*).
2. Use the fill syringe and insert the extension tube over the fill inlet on the Product.
3. Remove the plunger from the fill syringe and carefully pour water into the syringe. Water can be forced into the Product with the plunger, or bring the syringe to a higher level than the fill inlet and allow the water to flow into the Product. Watch the water level indicator to gauge the fill level as the reservoir is filled. The Product takes approximately two syringes of water.

Monitor the water level indicator to ensure the water level is between the Max and Min lines.

⚠Caution

To avoid damage to the Product, do not overfill the Product. If the Product is overfilled, water may flood the chamber. Use the drain port on the back of the Product to drain excess water. If water is found within the chamber, it must be wiped dry with a clean paper towel.

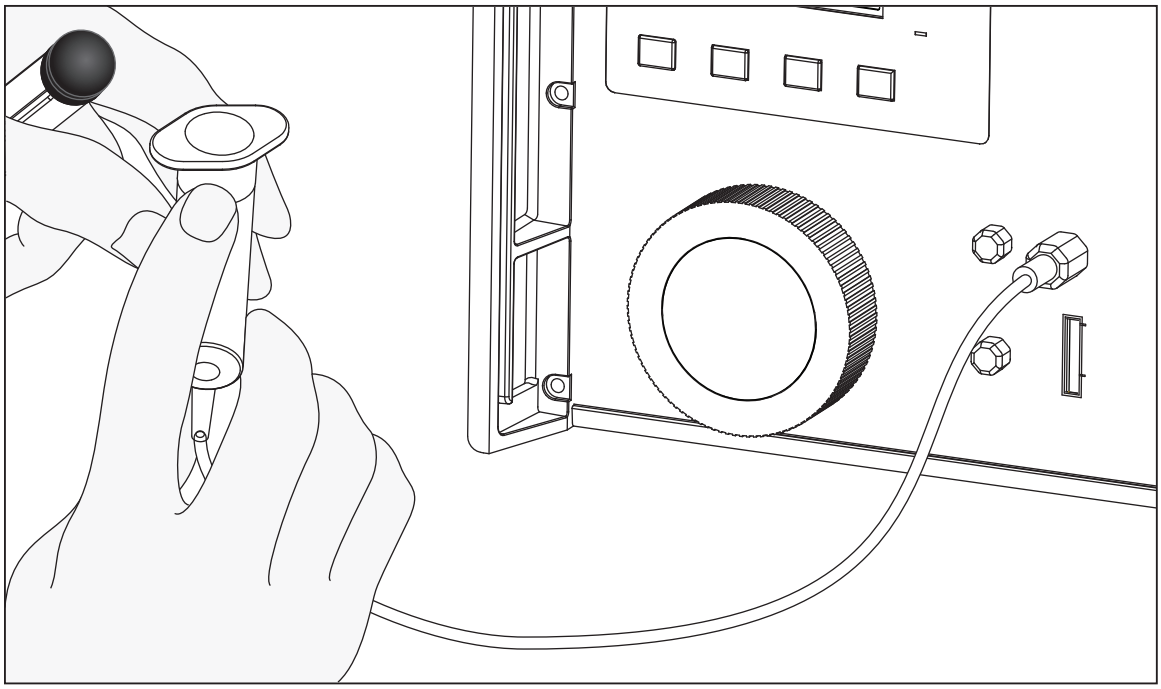

ibw009.eps

Figure 1. Fill the Water Level

Mains Voltage

⚠⚠Warning

To prevent possible electrical shock, fire, or personal injury:

- **Do not put the Product where access to the mains power cord is blocked.**
- **Use only the mains power cord and connector approved for the voltage and plug configuration in your country and rated for the Product.**
- **Make sure the ground conductor in the mains power cord is connected to a protective earth ground. Disruption of the protective earth could put voltage on the chassis that could cause death.**
- **Replace the mains power cord if the insulation is damaged or if the insulation shows signs of wear.**

The Product requires mains voltage that ranges from 100 V ac to 240 V ac with frequencies from 50 Hz to 60 Hz.

The Product comes with the appropriate line power plug for the country of purchase. See Table 3 for the mains line power plug types available from Fluke Calibration.

Table 3. Available Mains Power Plug Types

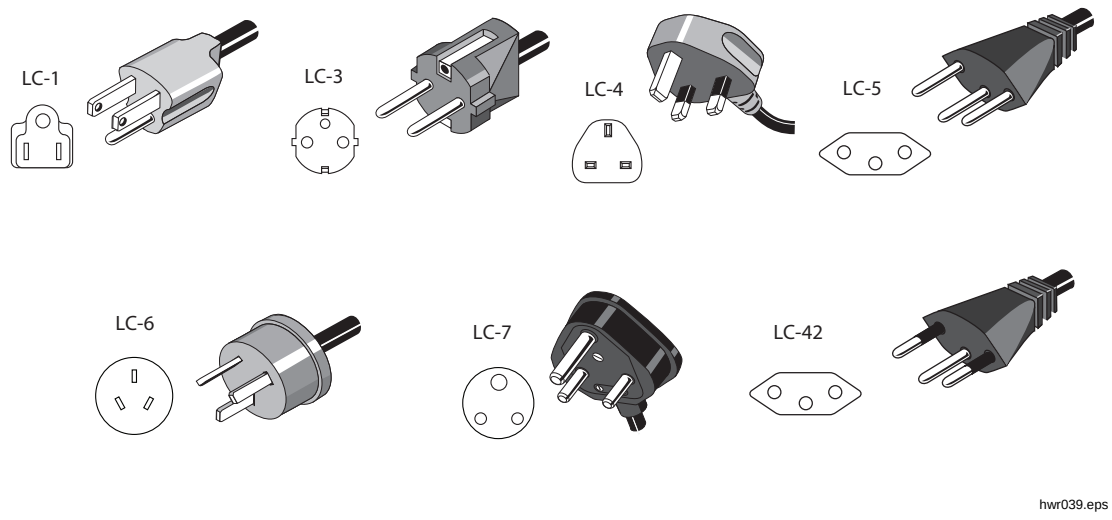

Type	Fluke Calibration Option Number
North America	LC-1
Universal Euro	LC-3
United Kingdom	LC-4
Switzerland	LC-5
Australia	LC-6
South Africa	LC-7
Brazil	LC-42

The Product

This section describes front-panel operation, the working chamber, the display and control panel, and the rear panel. See Tables 4, 5, 6, and 7.

Table 4. Front Panel

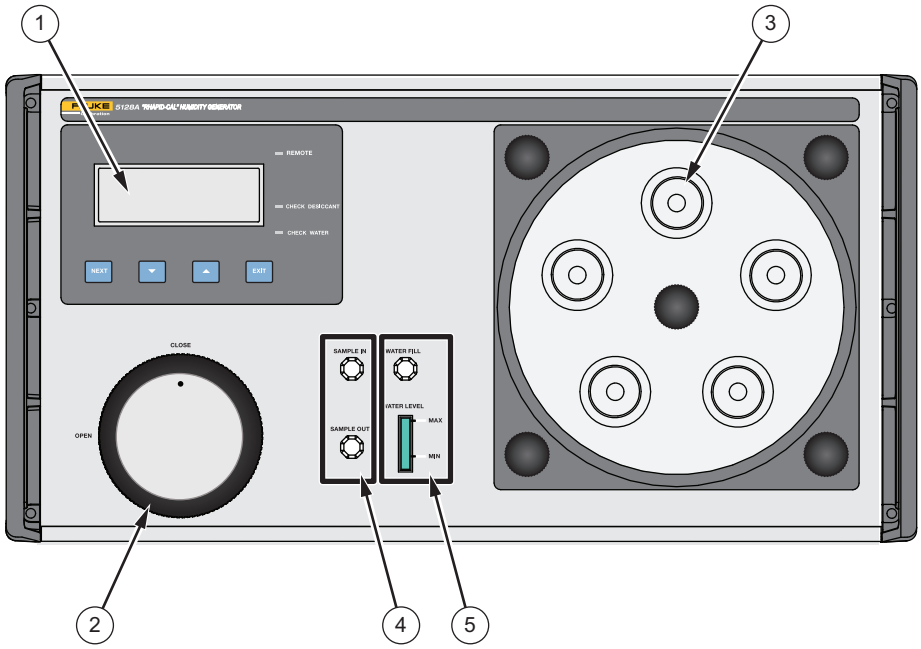

ibw001.eps

Item	Name	Description
1	Display and Control Panel	Refer to *Display and Control Panel* for a full description.
2	Desiccant Cap	Use to access the desiccant cartridge.
3	Chamber Door	Use to access the working chamber.
4	Sample In/Out	Draws and returns gas from the Product chamber. Use to measure the dew point of the chamber with a chilled mirror instrument that has its own pump. The Sample In/Out ports are the push-to-connect type, and accept ¼ in OD tubing.
5	Fill Inlet and Water Level Indicator	• Use the fill inlet to fill the internal humidifier with distilled water. • The water level indicator shows the relative amount of water in the humidifier. This level is best checked when the Product is in a standby state (Chamber Control Standby is On), when the Product has stabilized to its set point (for example the pumps are mostly off), or with the Product off.

Table 5. Working Chamber

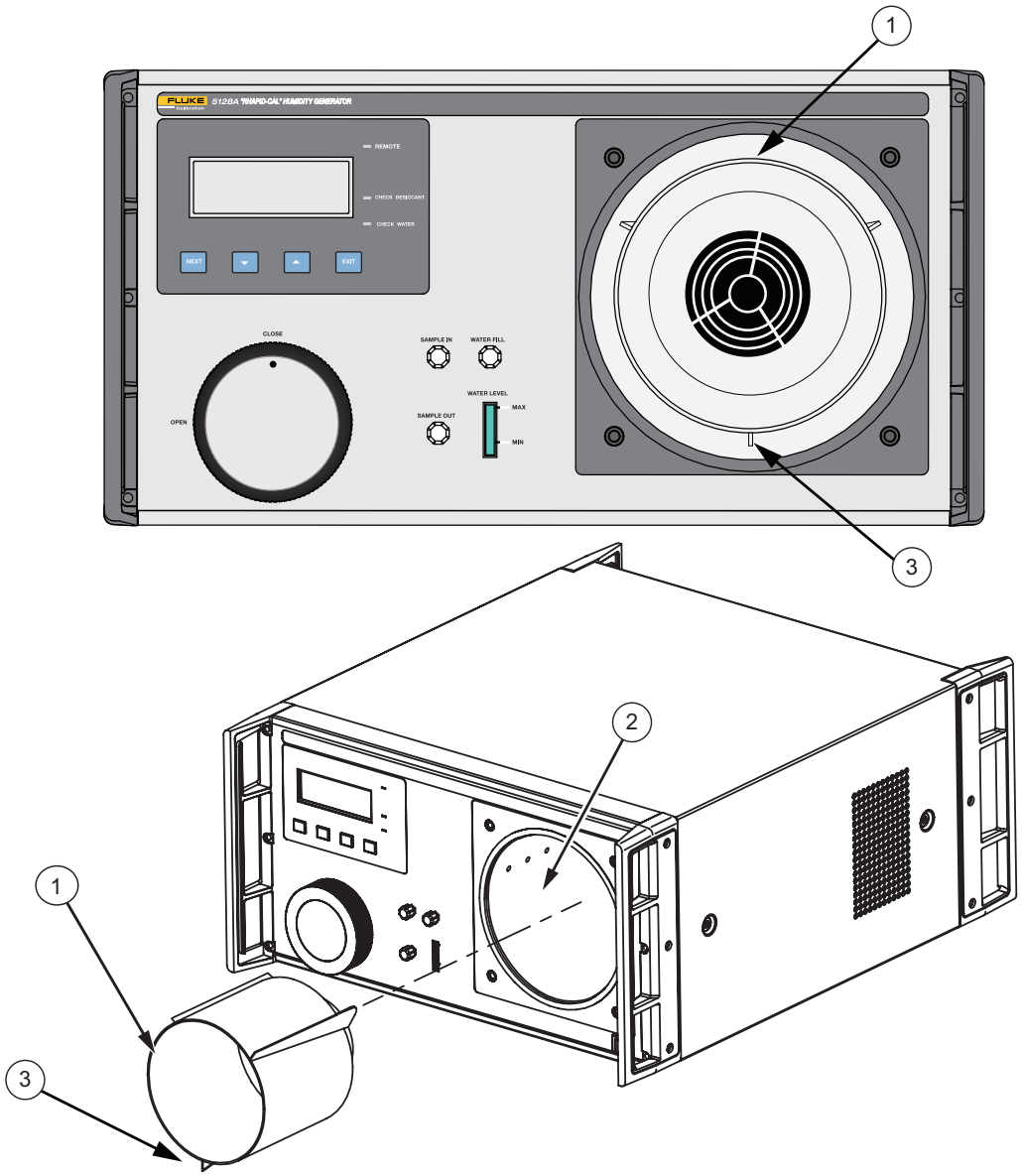

ibw023.eps

Item	Name	Description
1	Mixing Insert	Causes the air to circulate in a certain manner that gives better temperature and humidity uniformity inside the insert. The volume inside the insert is the *working area* where the Product guarantees its performance per the Product specifications. See the end of this manual for a template that outlines the working area. One of the three tabs on the outer part of the insert must be in the 6 o'clock position as shown in the illustration (3).This position ensures the best temperature and humidity uniformity within the working area.
2	Outer Chamber	The chamber where the mixing insert is placed. The UUT can be placed directly into the outer chamber without the mixing Insert, but the temperature and humidity will need to be monitored with an external reference probe.

Table 6. Display and Control Panel

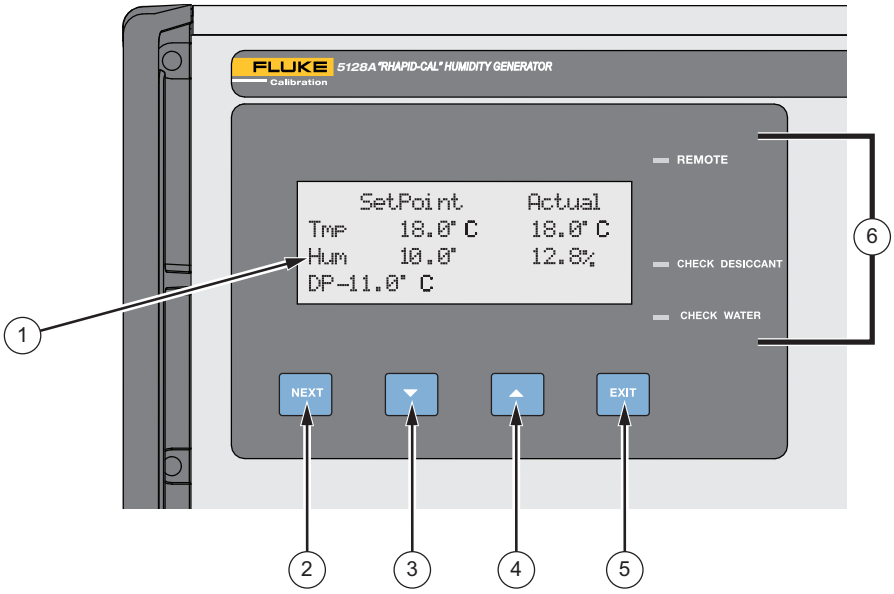

ibw002.eps

Item	Name	Description
1	Display	Shows: • Set points for temperature and humidity • Actual temperature and humidity • Calculated dew point • Lower right corner: Display messages during operation, HEATING at first startup.
2	**NEXT** Button	1. Push **NEXT** to toggle between the Temperature and Humidity Set fields. The active set field blinks. 2. Push and hold down **NEXT** for 4 seconds to step to the Standby screen. 3. When in the Standby screen, either **down** or **up** toggles the Standby mode On or Off. Push and Hold **EXIT** down for 4 seconds to return to the main screen.
3	**Down** Button	Moves the temperature or humidity setting downward, depending on which parameter blinks. A single button push increments the setting by one count. Hold the button down to rapidly advance the setting.
4	**Up** Button	Changes the temperature or humidity upward depending on which parameter blinks. A single button push increments the setting by one count. Hold the button down to rapidly advance the setting.

Table 6. Display and Control Panel (cont.)

Item	Name	Description
5	**EXIT** Button	Hold down for 4 seconds (from any screen) to return to the main screen.
6	Status Indicators	**Remote:** Indicates communication over the USB serial interface. **Check Desiccant:** Indicates there may be issues with the dry gas sub-system. Causes can be a saturated desiccant cartridge, a user setting that takes the Product longer to transition than normal, condensation within the chamber, and/or a leak in the system. See *Troubleshooting* for more details. **Check Water:** Indicates there may be issues with the wet gas sub-system. Causes can be a low water level, a user setting that takes the Product longer to transition than normal, condensation within the chamber, and/or a leak in the system. See *Troubleshooting* for more details.

Startup and Main Screen

When the Product is first activated, the display shows the Product model number on the startup screen. The Product then changes to the main screen and shows HEATING. This indicates that the internal humidifier is warming up to create sufficient water vapor that will allow high-relative humidity value settings. The Product will not control the chamber temperature or humidity when HEATING is on the main screen. To bypass this warmup period and control the chamber, push **EXIT** once. The Product now controls the chamber. When the heating process is bypassed, it may initially take longer to reach higher relative humidity values. Once the Product automatically removes the HEATING message, the setting time of higher relative humidity values is more consistent.

Maintenance Screens

Use the maintenance screens to calibrate the Product, troubleshoot the internal humidifier, and obtain a list of error codes. To access the maintenance screens, simultaneously hold **NEXT** and **EXIT** down. In 4 second intervals, the probe offset screen appears, followed by the BIT humidity screen, error codes and firmware version. To stop at any of these screens, release **NEXT** and **EXIT** when the appropriate screen appears. For Product maintenance, see *Maintenance*.

Probe Calibrate Screen

The probe calibrate screen shows the probe offsets for temperature and humidity and is used in the Product-adjustment process. Use the probe calibrate screen to load in a temperature offset and humidity offset to adjust the Product chamber output. Probe offsets are entered as part of the routine calibration process.

An example of the calibration offset screen:

```
  Probe Calibrate
T: 24.6°C   H: 46.7%
T Offset:  0.0°C
H Offset:  0.0%
```

BIT Humidity Gen Screen

The BIT humidity gen screen contains parameters associated with the internal humidity generator and is only used by trained service personnel. Push and hold down **EXIT** to return to the main screen.

Error Code Screen

The error code screen is shown and errors that the Product detects are presented. See *Error Codes* for a list of error codes. Push and hold **EXIT** to return to the main screen.

Firmware Version Screen

Product firmware version details are shown. Push and hold **EXIT** to return to the main screen.

Table 7. Rear Panel

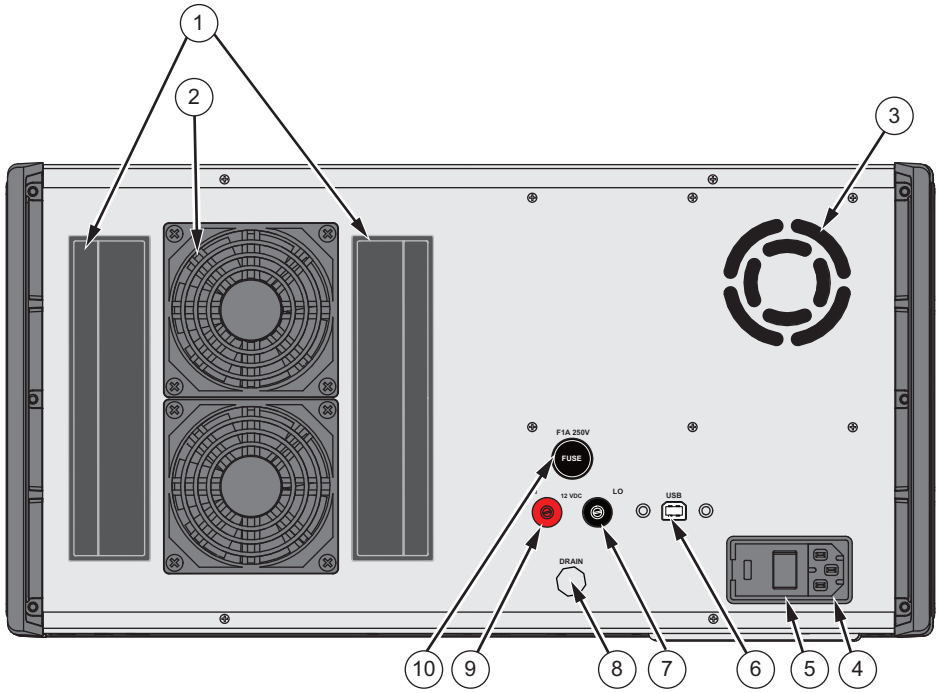

ibw003.eps

Item	Name	Description
1	Fan inlet/outlet holes	Do not block the inlet/outlet holes.
2	Fans	The two fans provide internal cooling to the Product.
3	Power supply fan access holes	Provides cooling for the internal power supply. Do not block these holes and periodically vacuum to remove any dust.

Table 7. Rear Panel (cont.)

Item	Name	Function
4	Fuse Holder and Mains Power Cord Receptacle	Contains two mains fuses and the receptacle for the mains power cord. Use an ac mains supply appropriate for the voltage range and region of use. See *Mains Voltage* and *Maintenance*.
5	Power switch	Turn on and off the Product.
6	USB Type B connector	Use this connection to remotely control the operation of the Product. Refer to *Remote Operation*.
7	LO	LO terminal for the 12 V dc output.
8	Drain plug	Used to drain water from the Product. Drain water if overfilled or for shipment.
9	HI	HI terminal for the 12 V dc output to power up transmitters and transducers.
10	Fuse	12 V dc output fuse (F1A 250 V fuse).

Operation

The subsequent sections explain Product operation. Before Product use, see *Fill the Product with Distilled Water.*

Chamber Door Use

Note

Before the Product is powered on, make sure that there is a chamber door secured in place. Without a door in place the Product can quickly lose water if the Product is not in the Standby state.

The Product ships with the square 5-port door. Other door styles are available as accessories. See Figure 2 and see *User-Replaceable Parts and Accessories*.

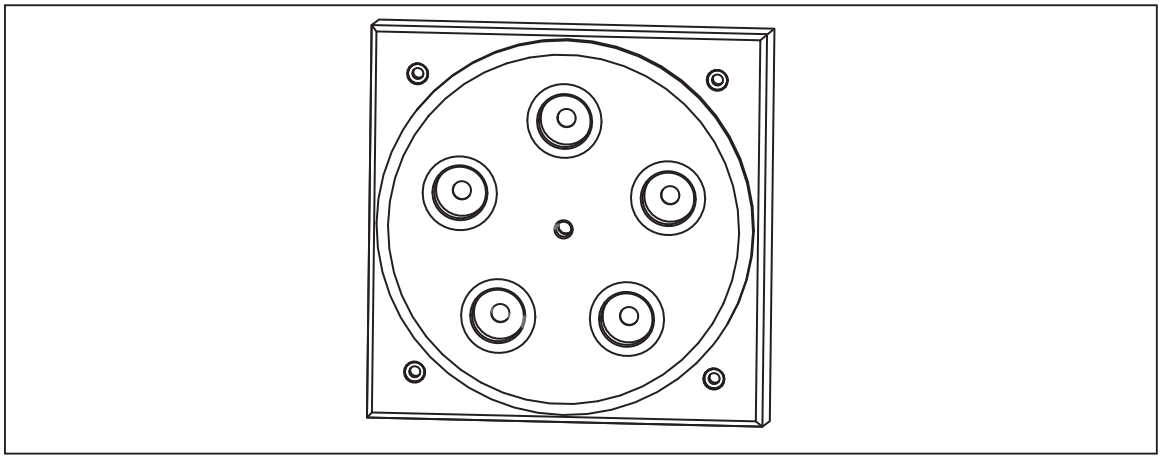

ibw011.eps

Figure 2. Five Port Square Door

Door Styles

- **(Standard) Square door with five ports, silicone gasket, center tightening screw, and four fasteners (one at each corner)**

  To install and use this door, push the door into the chamber opening until it stops. Then hand tighten the center screw to seal the round silicone gasket to the chamber.The four corner screws (1/4 in x 20 threads) are used to precisely locate the port locations and to further tighten the door against the black outer seal on the outside of the chamber.

- **(Accessory) Round door with five ports, silicone gasket, and center tightening screw (accessory)**

  To install and use this door, hand tighten the center screw to seal the round silicone gasket to the chamber. Loosen the center screw to remove the door from the chamber opening. To re-insert the door, align the rear acrylic piece, middle silicone gasket, and front acrylic piece and then place the assembly onto the chamber opening. Hand tighten the center screw to provide a snug, airtight seal. The UUT probes, and any external reference probe(s), are inserted into one of the five ports by removing the cap and placing the UUT through the cap and appropriate-sized silicone grommet and port opening.

- **(Accessory) Clear square door with no ports, no silicone gasket, and four fasteners (one at each corner)**

  To install and use this door, use the four corner screws (1/4 in x 20 threads) to fasten the door in place and tighten the door against the black outer seal on the outside of the chamber. Use this door to calibrate data loggers that are placed into the chamber. Use this door in conjunction with a shelf inside the chamber. See *Data Logger Calibration*.

Note

To avoid measurement issues, do not open the chamber door when the chamber temperature is below the ambient temperature. Water vapor from the atmosphere will condense inside the chamber. If condensation forms inside the chamber, shut the Product off and remove the power cord. Thoroughly dry the chamber with a clean paper towel before further use. See Remove Condensation.

Turn On the Product

To turn on the Product:

1. Push the “1” side of the power switch on the rear panel.
2. Monitor the startup screen for errors as the Product powers up. If an error shows, see *Troubleshooting and Error Code*. Contact Fluke Calibration for unresolved errors, see *Contact Fluke Calibration*.
3. Wait for HEATING to disappear from the main screen before the temperature and humidity are set.

Turn the Product Off

Push the power switch on the rear panel to the “0” position to turn off the Product.

If the chamber dew point is greater than the ambient temperature, to avoid condensation, do not open the chamber door for 1 hour so that the chamber comes to room temperature.

Do not turn off the Product when its actual humidity is >80 %. Doing so risks the chance that condensation will form inside the chamber. When possible, turn the Product to a lower humidity before it is powered off.

Mixing Insert

The mixing insert improves the temperature and humidity uniformity of the Product. It contains the working area that has guaranteed performance. The mixing insert can be removed to calibrate larger UUTs. In this case, an external reference probe should be used to monitor actual temperature and humidity conditions. Slide the mixing insert out of the chamber to remove it. To reinstall, align the posts on the mixing insert against the chamber walls, and gently slide it back into the rear of the chamber. One of the three tabs on the outer part of the insert must be in the 6 o'clock position as shown in Table 5. This position ensures the best temperature and humidity uniformity within the working area.

To check for water condensation, remove the mixing insert from the chamber and then reinstall it.

Initial Warmup Period

The Product is a fast-response system able to change temperature as quickly as 10 °C per minute and 10 % RH per minute. However, the Product can have a slower initial response after exposure to cold temperatures when transported or long periods of being off. When cold, and upon initial power up, the Product heats up the internal humidifier and creates necessary water vapor. When sufficient water vapor is generated, `Heating` is removed from the main screen, and the Product is ready for use.

Set Temperature and Humidity

To change the set point for temperature:

1. Push **NEXT** until the Temp number on the display blinks.
2. Push **up** or **down** to move the set point up or down. Hold **up** or **down** down to quickly change the set point.
3. To change the set point for humidity, push **NEXT** until the RH number blinks. Push **up** or **down** to increment the set point up or down. Hold **up** or **down** down for a faster change in set point.

Condensation Prevention

The Product has a condensation-prevention feature that minimizes the possibility of condensation when certain user settings are called for. At high humidities, when the chamber dew point is within 2 °C of the actual chamber temperature, a CAUTION message shows on the lower right hand corner of the display and the controller slows the rate of temperature and humidity change. If the CAUTION message shows, do not set temperatures significantly below the actual temperature without first setting the humidity to a lower level.

For example, a UUT has verification points at 23 °C 90 % RH followed by 10 °C 90 % RH. The first set point, 23 °C and 90 % RH has a dew point of 21.3, within 2 °C of the actual temperature. When the chamber actual conditions reach this set point, CAUTION shows on the display. Before setting the chamber to 10 °C, set the humidity to about 1/2 the Actual (45 %). When that humidity is reached, then set the Product to 10 °C 90 % RH.

Note

A better verification pattern to avoid condensation would be to set the lower dew point condition first, in this case 10 °C 90 % RH followed by 23 °C 90 % RH.

If condensation forms inside the chamber, the check desiccant or check water indicator may be on, and/or the actual humidity is far off from the set humidity after the typical stabilization time. See *Remove Condensation*.

Calibrate UUTs

The subsequent sections explain how to do calibrations on humidity probes or UUTs.

Recommended Calibration Sequences

These recommendations ensure fast, repeatable calibrations of humidity sensors:

1. Do lower-relative humidity calibrations first and ramp up to the higher-humidity levels on each subsequent calibration step.
2. Do lower-temperature calibration points first to minimize the probability of water vapor condensing inside the chamber.
3. In general, best practice is to start at the lowest dew point and then move up in dew point during a calibration procedure.

Note

When the dew point of the Product chamber is greater than the ambient temperature, condensation can form on or near the chamber door or on the UUT. If condensation forms anywhere in the chamber, the relative humidity inside the chamber is unknown. Condensation must always be removed from inside the chamber before calibrations are performed. See Remove Condensation.

Remove Condensation

To remove condensation:

1. Turn off the Product, unplug the mains power cord, and remove the chamber door.
2. Carefully inspect the mixing insert, chamber door, and UUT.
3. Remove the mixing insert to check the outer chamber for condensation.
4. Wipe off all condensation and moisture with a clean paper towel.
5. If condensation is present on the UUT, wipe the outer surfaces with a clean paper towel. Do not touch the humidity sensing element.
6. Re-install the mixing insert, re-attach the door, plug in the mains power cord, and turn on the Product. Heat the chamber to 40 °C and relative humidity to 10 % for approximately 10 minutes to ensure proper performance.

Insert the UUT

To make sure the UUT is inserted into the Product chamber correctly, use the working volume template that is included at the end of this manual, see Figure 11.

Use one of the probe ports on the chamber door to insert the UUT into the chamber:

1. Make a copy of this figure and physically place it on top of the Product over the chamber. Use the template to know how far to insert the UUT. See Figure 3.
2. Unscrew the cap on the probe port and remove the plug.
3. Place the UUT probe through the cap and an appropriately-sized silicone grommet.
4. Put the UUT probe inside the port opening. Ensure the UUT sensor is inside the working volume of the chamber. The working volume is outlined in Figure 11, and has a depth of 76 mm to 152 mm (3 in to 6 in) from the inner door face.
5. Hand tighten the cap around the UUT to give an airtight seal. If necessary, add sealant material around the UUT probe. Parafilm, Scotch™ Removable Adhesive Putty, or similar materials work well.

For probes that are too short to fit in the working volume, use an extension cable for the probe if available. The port cap and appropriate-sized silicone grommet should be hand tightened around the cable with the UUT probe attached to the cable on the inside of the door.

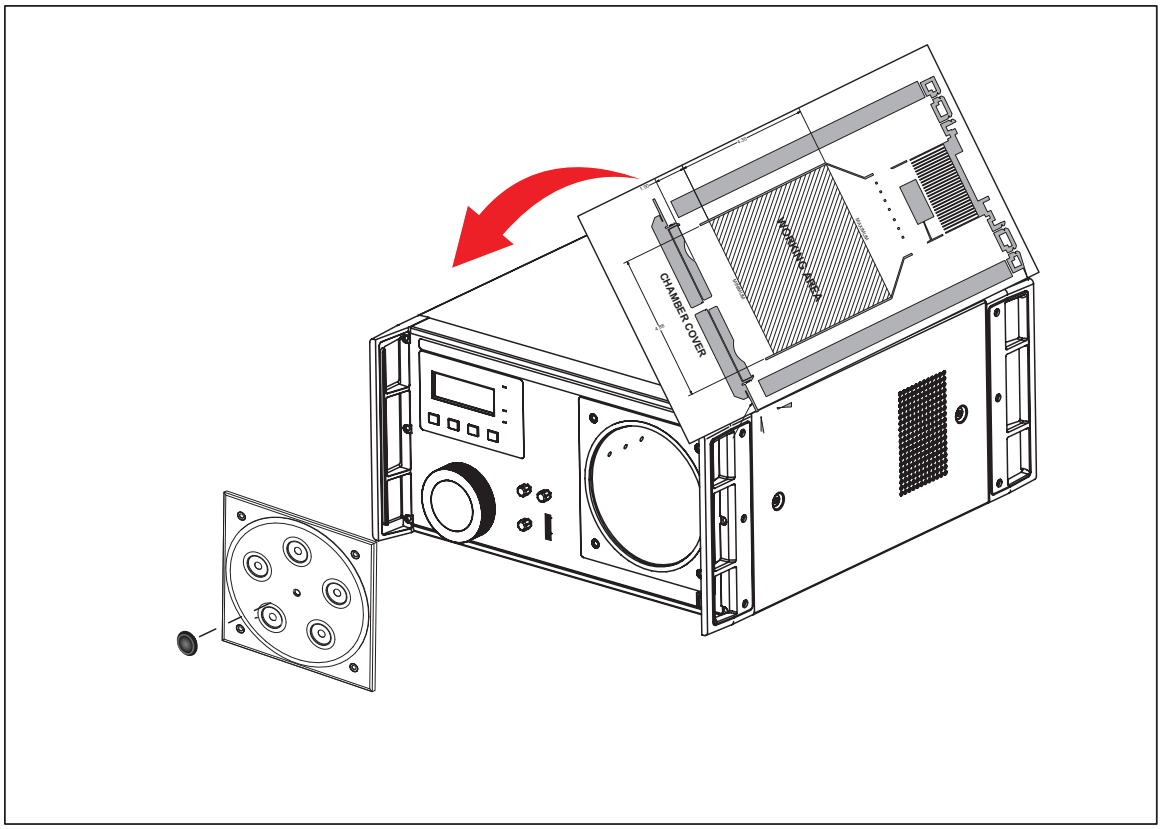

ibw022.eps

Figure 3. Use the Working Volume Template

For short probes without an available cable, insert the probe into the door as far as possible and do calibrations at or near ambient temperature. This eliminates temperature gradients between the UUT and the chamber. Under these conditions, where the UUT probe is not fully immersed in the working volume, an external reference probe that is inserted at the same depth should be used to ensure the best calibration.

Stabilize the Chamber and UUT

The Product response time is normally much faster than that of the UUT, with typical stabilization times <5 minutes between typical UUT verification points. However, to ensure that the UUT temperature and humidity is at equilibrium with the chamber conditions, allow for stabilization times of at least 15 minutes between set points. Longer stabilization times may be necessary if the initial UUT temperature is significantly different than the chamber temperature and if the chamber is set to extreme humidity and temperature set points. Monitor the actual temperature and humidity points as shown on the Product display. Chamber stabilization is typically reached when the actual temperature is within 0.1 °C of the set temperature, and the actual humidity is within 0.2 % of the set humidity.

Data Logger Calibration

To calibrate Data Loggers:

1. Place them directly into the calibration area of the chamber and use the clear glass door and the shelf accessory. See Figure 4 for approximate placement.

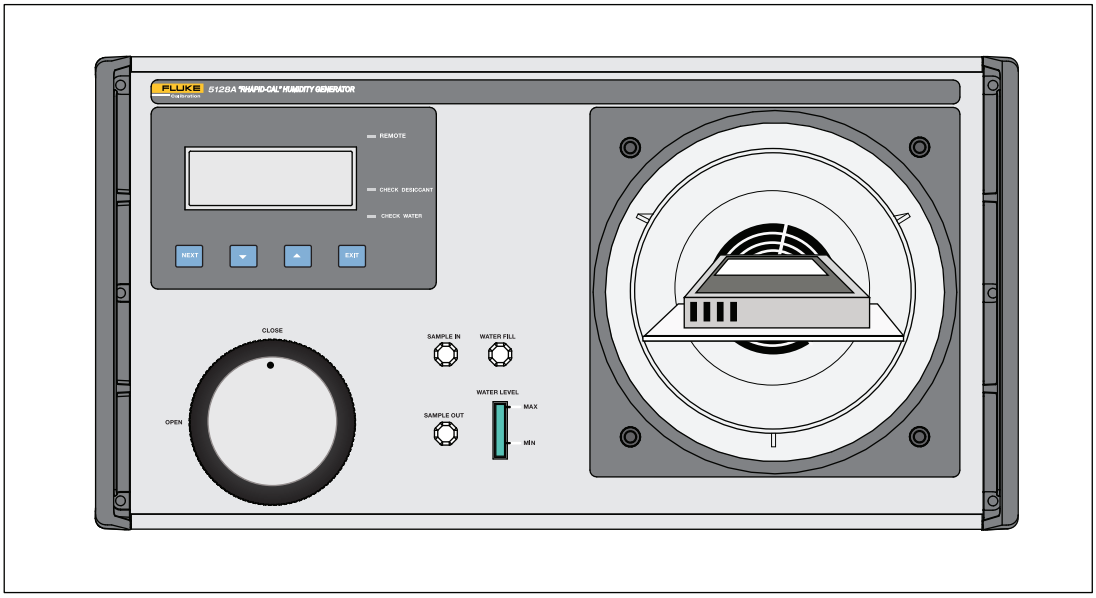

ibw025.eps

Figure 4. Data Logger Placement

2. Put the UUT into its data logging mode, and then set and record the actual calibrator temperature and humidity at known points in time.
3. Compare the UUT logged data against the actual Product temperature and humidity settings. For data loggers that are too large to fit inside the mixing insert, but fit inside the outer chamber, the larger shelf can be used to hold the UUT. Use an external reference probe to monitor the conditions of the Product.

External Reference Probe Use

Use an external reference probe inserted into one of the chamber door ports to perform calibrations tied to the uncertainty of the external probe. This is necessary when the mixing insert is removed to accommodate larger UUTs, or to obtain lower uncertainties in the calibration. A membrane-type sensor or chilled mirror can be used for an external reference. The air flow within the chamber should be sufficient for most remote chilled mirror probes such that an external pump is not necessary. Match the depth of the external reference to the UUT probe depth whenever possible.

Sample In/Out Ports

The humidity within the working chamber can be measured with a chilled mirror that does not have a remote probe by drawing gas samples out of the chamber using the Sample In/Out ports at the front of the Product. Use an external pump capable of generating a flow of 0.5 liters per minute. The gas sample dew point must be below the ambient temperature to avoid condensation on the Sample In/Out port lines, otherwise the lines must be heated to 5 °C above the chamber temperature. Fluke Calibration recommends that the gas sample is returned back to the Product through the Sample In port.

Measure the temperature within the chamber and the dew point measurement from the chilled mirror to determine the relative humidity inside the Product chamber. For the best performance, use stainless steel or PTFE tubing for all connections to the Sample In/Out ports.

Temperature Extremes

The Product has guaranteed specifications using its internal reference for chamber temperatures from 18 °C to 28 °C, 7 % to 95 % RH (see *Specifications* for exact points). Chamber temperatures outside of this range can be generated, but an external reference probe should be used.

When a UUT or reference probe is inserted through the door, stem conduction should be considered at the extremes of the Product generating range (for example, chamber conditions below 18 °C or above 28 °C). At these extremes, condensation may form at cold spots in the system. To avoid condensation, place the entire UUT measurement head inside the chamber with an extension cable. Place insulation around the door to help prevent condensation.

Remote Operation

For remote operation of the Product, send ASCII commands through the USB serial interface. The USB interface appears as a virtual COM port when connected to a Windows PC.

Set Up

Connect a USB A to B cable between the Product and PC. If this is the first time the PC has been connected to the Product, you may be prompted to download and install the drivers for the interface. The drivers are normally part of the Windows operating system. Windows detects the interface as a virtual COM port. If Windows is unable to find the driver, contact Fluke Calibration for technical support. Refer to *Contact Fluke Calibration*.

The default settings on the Product are 9600 baud, 8 data bits, 1 stop bit, no parity or flow control. These settings cannot be changed.

Remote Commands

To use the USB interface, use the remote commands in Table 8 to communicate with the Product. When communication is active, the Remote indicator on the front panel is lit.

Table 8. Remote Commands

Command	Read/Write	Function
BOOT	Write	Resets the Product.
HELP	Read	Returns the list of remote commands available.
ID	Reads	Returns “Fluke 5128A”, serial number and firmware revision.
HOFFSET	Read	Returns the value of the humidity offset stored within the Product.
HOFFSET x.x	Write	Sets the humidity offset used in the Product as part of the calibration process (% RH).
TOFFSET	Read	Returns the value of the temperature offset stored within the Product (in °C) .
TOFFSET x.x	Write	Sets the temperature offset used in the Product as part of the calibration process.
HREAD	Read	Returns the actual chamber humidity.
TREAD	Read	Returns the actual chamber temperature.
DPREAD	Read	Returns the calculated chamber dew point temperature.
HSET	Read	Returns the humidity set point.
TSET	Read	Returns the temperature set point.
HSET xx.x	Write	Sets the humidity set point to xx.x (% RH).
TSET xx.x	Write	Sets the temperature set point to xx.x (in deg C).
STANDBY	Read	Returns the standby state, either ON or OFF.
STANDBY ON	Write	Puts the Product into its Standby state.
STANDBY OFF	Write	Puts the Product into its normal operating state.
WARMUP	Read	Returns status of warmup indication. "On" means that "Heating" is still on.

Transport the Product

Ensure that the water level is below the MAX indicator on the front panel when transporting the Product on a cart or in a vehicle. Excess water may flow into the Product otherwise. Always transport the product in its horizontal position.

Ship the Product

Fluke Calibration recommends that the Product be drained of water before shipping. To do so, unfasten the drain screw cap on the rear of the Product, and drain the water by slightly tilting the Product. When shipping the Product, use the original carton and packing material or Fluke Calibration case accessory part number 4791304.

Maintenance

This section explains routine operator maintenance necessary to keep the Product in optimal condition.

Clean the Exterior

To clean the Product, wipe it with a cloth that is lightly dampened with water or mild detergent. Do not use aromatic hydrocarbons, chlorinated solvents, or methanol-based fluids. To clean the display, use a soft cloth lightly dampened with alcohol.

⚠Caution

Do not use aromatic hydrocarbons or chlorinated solvents for cleaning. They can damage the plastic materials used in the Product.

Desiccant Replacement

The Product uses a mixed-flow method to generate relative humidity. A desiccant cartridge provides a source of low humidity and an internal humidifier generates high humidity. Check the desiccant cartridge when the **Check Desiccant** indicator is lit on the front panel or the display shows LO RH ERR. The normally-blue desiccant material is pink when it becomes saturated. When the entire normally-blue desiccant material is pink, the cartridge should be replaced. See *Display and Control Panel*.

To change the desiccant cartridge (see Figure 5):

1. Turn the Product off.
2. Turn the front panel cap ¼ turn counter-clockwise and remove the cap.
3. Loosen the rear seal of the desiccant by gently nudging the front of the desiccant in various directions (up/down, left/right).
4. Pull the spent cartridge out of the Product and insert a new cartridge.

Additional desiccant cartridges are available from Fluke Calibration.

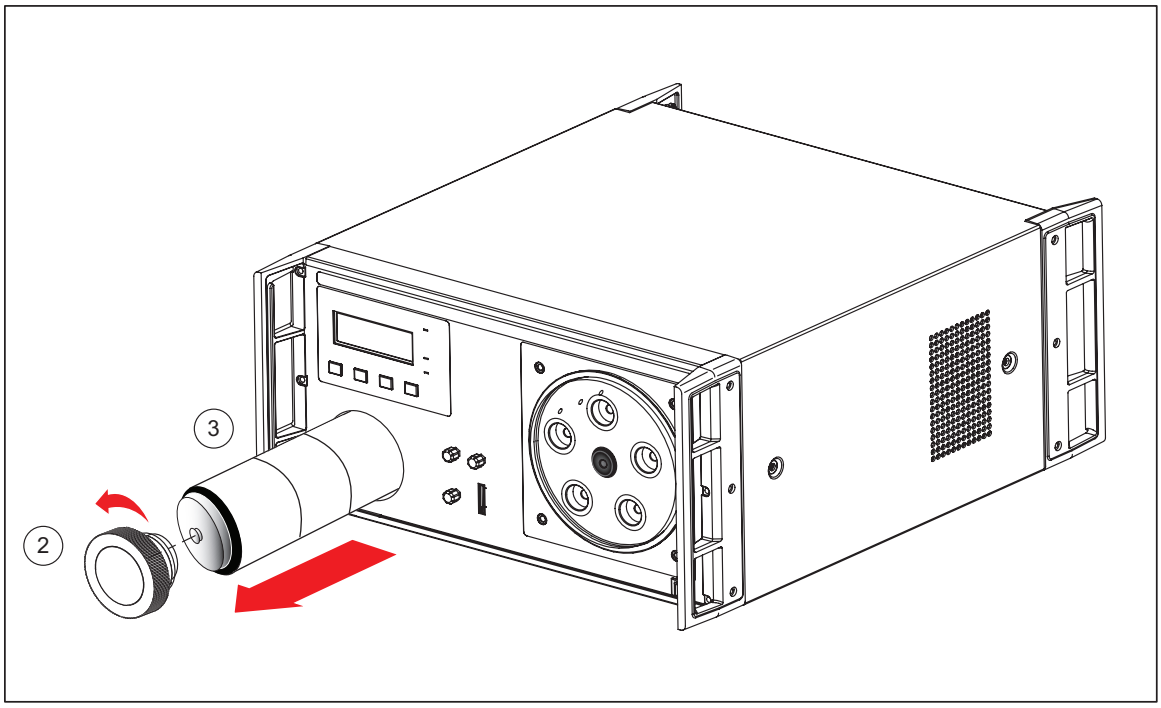

ibw026.eps

Figure 5. Change the Desiccant Cartridge

Water Level

Use the Product only when the water level is between **Max** and **Min** on the front-panel indicator as viewed with the Product off or in Standby state. Check the water level when the **Check Water** indicator is lit on the front panel or the display shows HI RH ERR. There are multiple reasons for **Check Water** and/or HI RH ERR to appear. See *Troubleshooting* for more details. Do not add more water if the level is between Max and Min, as this overfills the Product. Use only clean, distilled water to fill the reservoir. Use the drain plug at the rear of the product to drain excess water from the Product. See *Display and Control Panel*.

⚠⚠Warning

To prevent possible electrical shock, fire or personal injury, do not overfill the reservoir.

Fuse Replacement

The Product has mains fuses located in the mains input assembly. The fuse-rating label above the mains input assembly shows the correct replacement fuse ratings for each operating voltage.

⚠⚠Warning

To prevent possible electrical shock, fire, or personal injury:

- **Turn the Product off and remove the mains power cord. Stop for two minutes to let the power assemblies discharge before you open the fuse door.**
- **Use only specified replacement fuses, see Table 9.**

Table 9. Replacement Mains Fuses

Line Voltage	Fuse Type
⚠ 100 V to 120 V, ⚠ 220 V to 240 V	5 X 20 mm 4 Amp Fast Blow (F4A 250V)

To replace the mains fuse, refer to Figure 6:

1. Disconnect the mains power cord.
2. With a standard screwdriver, release the fuse holder door ①.
3. Pull out the fuse holder ②.
4. If necessary, replace the fuse ③.
5. Reinsert the fuse holder.
6. Close the fuse holder door.

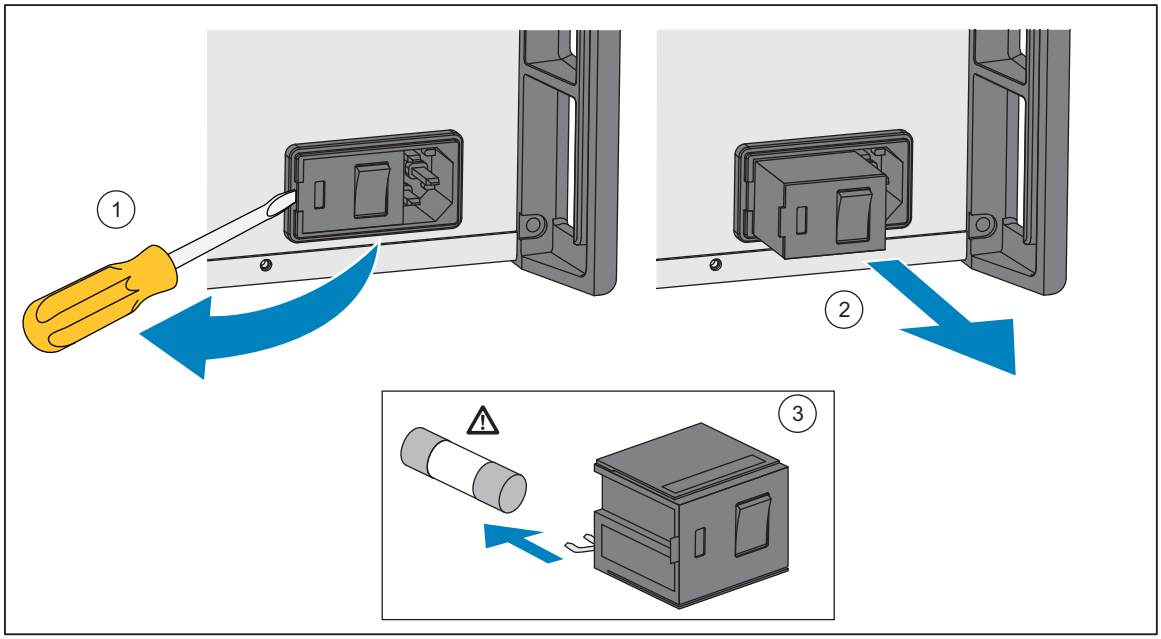

ibw007.eps

Figure 6. Replace the Mains Fuses

The Product has a fuse for the 12 V dc transducer power output located in the rear panel. Replace only with a 1 A Fast Blow fuse (F1A 250V 5x20mm). To change the fuse, see Figure 7.

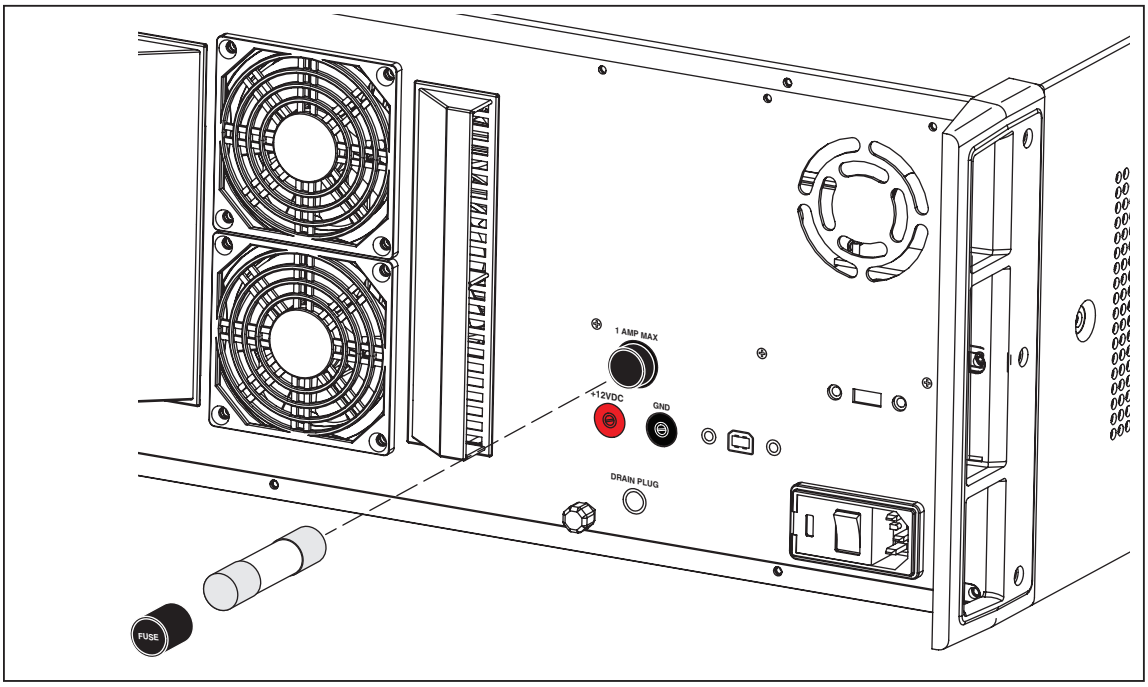

ibw024.eps

Figure 7. Replace the 12 V Fuse

Calibration

This section contains calibration procedures for the Product.

Calibration Principle

To calibrate the Product, the chamber is measured at a variety of temperatures and relative humidity levels using a 70 % guardband to account for measurement uncertainty. Temperature and humidity offsets are stored in the Product if readings are found to be outside of the allowed tolerances.

The calibration settings order shown in Table 11 is optimized to give the fastest Product stabilization times, and also to minimize the chance of condensation during the calibration process.

Required calibration equipment is listed in Table 10.

Table 10. Calibration Equipment

Classification	Minimum Use Specification	Recommended Equipment
Chilled mirror hygrometer	0.1 °C dew point uncertainty	Michell Instruments S8000 Remote, or RH Systems 473 with RP2 probe
Readout	0.006 °C @ 25 °C thermistor uncertainty	Fluke 1586A Super-DAQ Precision Temperature Scanner with DAQ-STAQ multiplexer
Thermistor	0.01 °C calibration uncertainty	Fluke 5611T 8 probes are required
Thermistor probe fixture	Positions four of the thermistor probes in a square pattern at the rear of the working area, and the other four thermistors in a square pattern in the front of the working area	Custom wire jig
Calculator	Relative humidity calculator	Thunder Scientific Humicalc®, Michell Instruments Humidity Calculator, Vaisala Humidity Calculator

Environmental Conditions

Laboratory environmental conditions required to complete this procedure:

- Temperature range: 23 °C ±3 °C
- Relative humidity: below 60 %

Equipment Setup

Attach the chilled mirror probe and thermistor probes as shown in Figure 9. Connect the thermistor probe to the thermistor readout and the chilled mirror probe to the chilled mirror instrument.

Using a Chilled Mirror Probe

There are different ways to use a chilled mirror with the Product. The subsequent sections outline several of them:

- You can draw a gas sample from the chamber as shown in Figure 8. The tube to extract the sample is inserted into one of the ports. The chilled mirror sensor needs its own pump to draw the sample from the chamber. Experiment with the pump speed to draw enough gas for the chilled mirror to work, but not so much that the Product performance is adversely affected. A flow range of 0.1 liters to 0.5 liters per minute is usually adequate. Use PTFE or stainless tubing for best results.

⚠Caution

When drawing gas out of the chamber in this method, the dew point of the gas must be lower than ambient temperature, otherwise a heated tube must be used to prevent the formation of condensation in the tube.

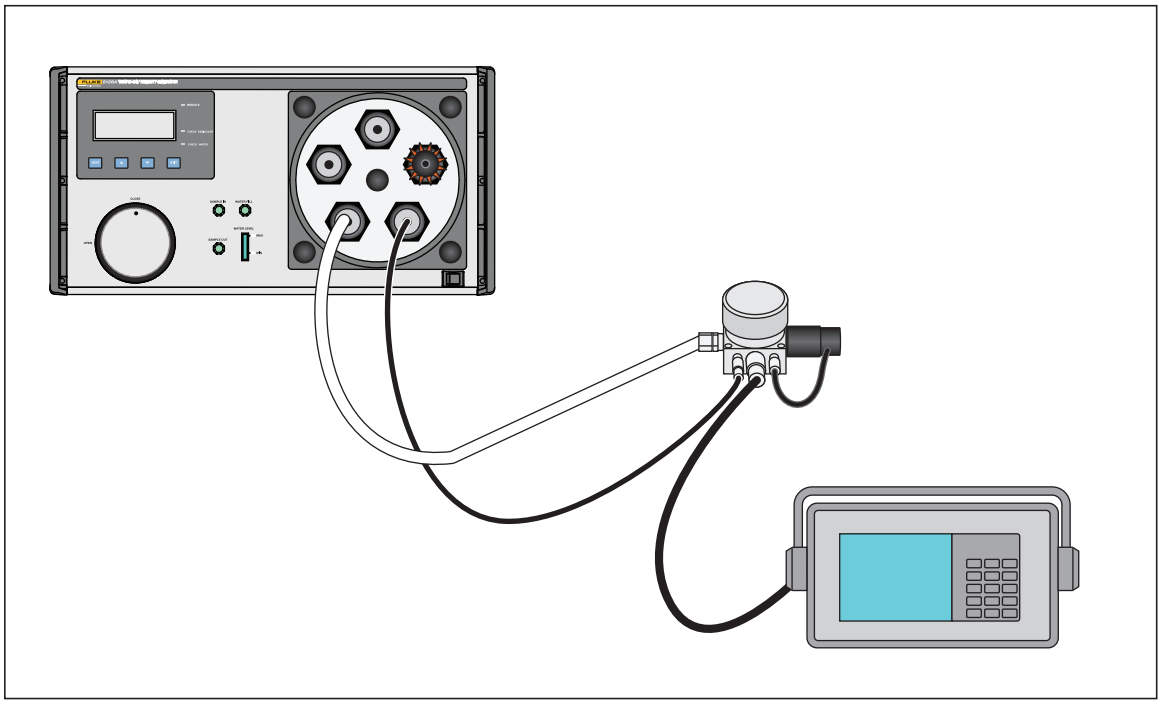

ibw013.eps

Figure 8. Chilled Mirror with Pump Connections

- If the chilled mirror has a remote sensing head that fits into one of the door ports, insert the remote head into the door as shown in Figure 9. Ensure that the remote head sensor is inserted into the working volume of the chamber. There is sufficient gas flow within the chamber such that an external pump is normally not needed in this situation.

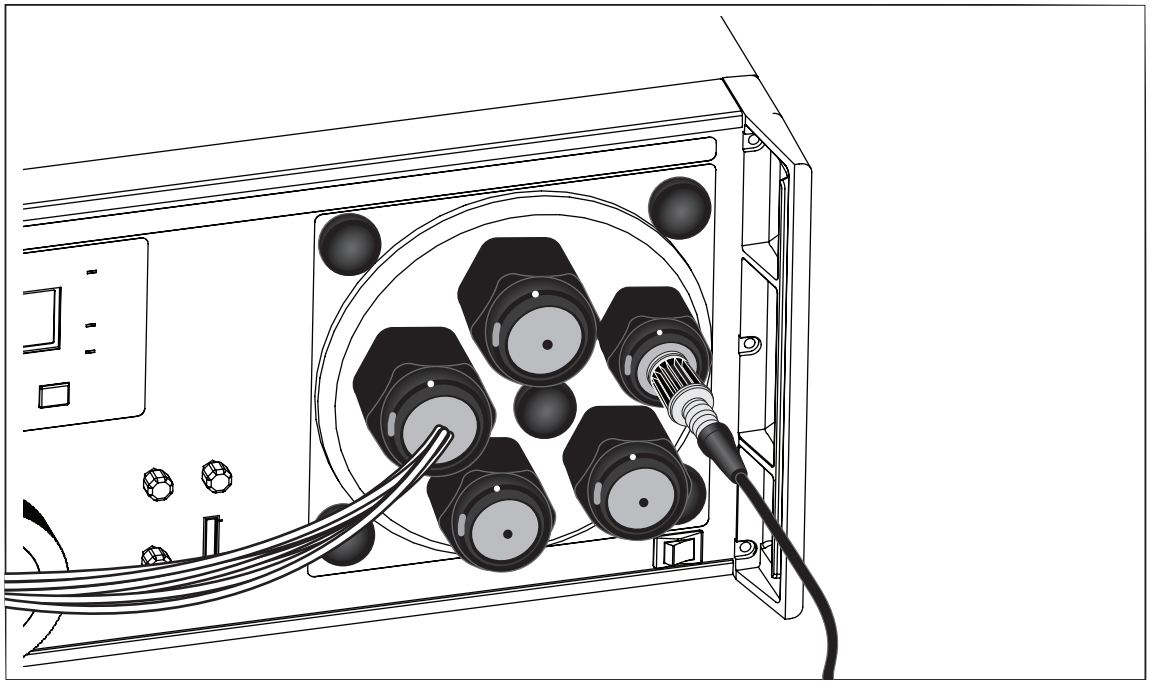

ibw012.eps

Figure 9. Chilled Mirror Probe Inserted Directly into the Door.

- A gas sample from the Sample Out port can be drawn with a chilled mirror that has a pump, returning the gas into the Sample In port. A flow rate of 0.1 liters to 0.5 liters per minute is usually adequate. Ensure the chosen flow rate does not cause excessive chamber temperature non-uniformity. Use PTFE or stainless tubing for best results. See Figure 10.

⚠Caution

When drawing gas out of the chamber in this method, the dew point of the gas must be lower than ambient temperature, otherwise heated tubes must be used to prevent the formation of condensation in the tube.

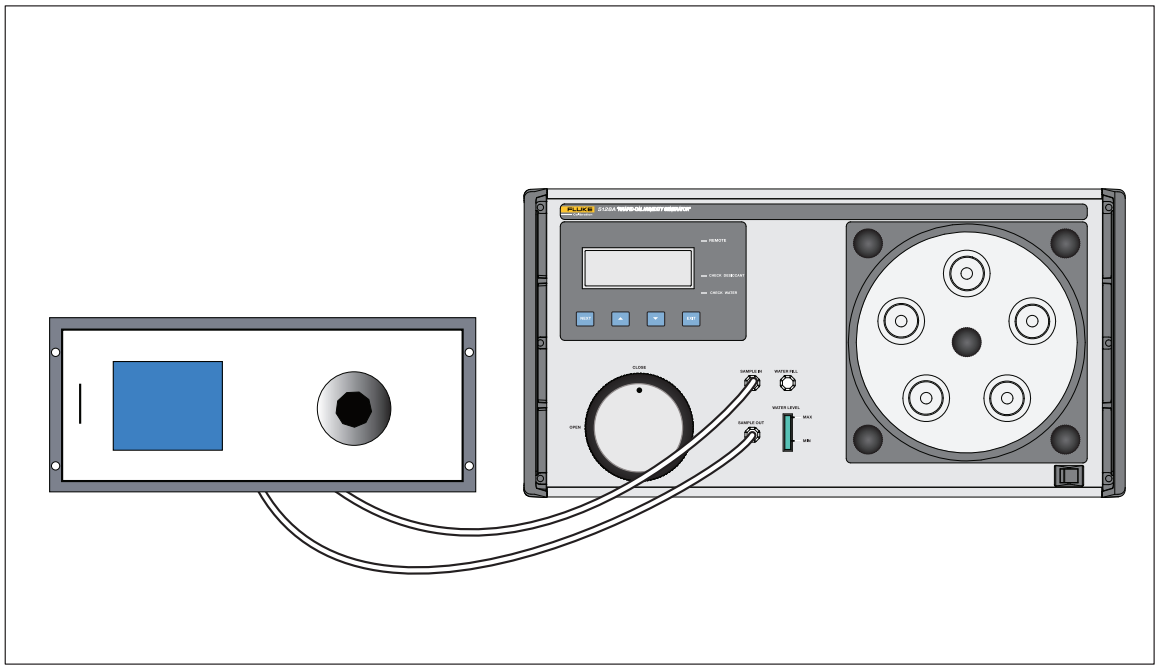

ibw021.eps

Figure 10. Connections

As Found Data Collection

For each step in Table 11:

1. Set the Product to the calibration set point shown in Table 11. Allow 35 minutes for stabilization.
2. Take the dew point measurement with the chilled mirror.
3. Take the temperature measurement with the 5611T probes. Calculate the average of the 8 temperature measurements for each step and enter that as each of the Temperature Readings in Table 11.
4. Use a relative humidity calculator to determine the relative humidity for that test point.

Table 11. Calibration Steps

Step	Temperature Set Point	Humidity Set Point	Dew Point Reading	Temperature Reading	Calculated RH	Low T Tolerance	High T Tolerance	Low RH Tolerance	High RH Tolerance
1	18 °C	7 %				17.86 °C	18.14 °C	6.3 %	7.7 %
2	18 °C	20 %				17.86 °C	18.14 °C	19.3 %	20.7 %
3	23 °C	20 %				22.86 °C	23.14 °C	19.3 %	20.7 %
4	28 °C	20 %				27.86 °C	28.14 °C	19.3 %	20.7 %
5	23 °C	35 %				22.86 °C	23.14 °C	34.3 %	35.7 %
6	18 °C	45 %				17.86 °C	18.14 °C	44.3 %	45.7 %
7	23 °C	45 %				22.86 °C	23.14 °C	44.3 %	45.7 %
8	28 °C	45 %				27.86 °C	28.14 °C	44.3 %	45.7 %
9	18 °C	80 %				17.86 °C	18.14 °C	79.3 %	80.7 %
10	23 °C	80 %				22.86 °C	23.14 °C	79.3 %	80.7 %
11	23 °C	80 %				27.86 °C	28.14 °C	79.3 %	80.7 %
12	23 °C	95 %				22.86 °C	23.14 °C	94.13 %	95.88 %
13	28 °C	70 %				22.86 °C	23.14 °C	69.3 %	70.7 %

Load Temperature and Humidity Offsets into the Product

If there are any observed errors in the As Found data that are greater than 70 % of tolerance, temperature and humidity offsets can be entered into the Product. If the subsequent procedure cannot bring the Product into tolerance, contact Fluke Calibration.

To load offsets into the Product:

1. Record the As Found temperature and relative humidity offset values that are entered into the Product.
2. Record the Product displayed Actual temperature at the set point of 23 °C, 35 %. Calculate the difference from reference temperature (actual temperature at 23 °C) as “A” (A = DUT_Actual_T - Ref_T).
3. Record the Product displayed Actual temperature at the set point of 23 °C, 80 %. Calculate the difference from the reference temperature as “B”.
4. Calculate T_Error with: T_Average_Error = (A + B) / 2.
5. Calculate the new temperature offset with:
   T_Offset_New = T_Offset_As_Found - T_Average_Error
6. Record the Product displayed Actual relative humidity at the set point of 23 °C, 35 %. Calculate the difference from the reference as “C” (C = DUT_Actual_RH - Ref_RH).
7. Record the Product displayed Actual relative humidity at the set point of 23 °C, 80 %. Calculate the difference as “D”.
8. Calculate RH_Error with: RH_Average_Error = (C + D) / 2.
9. Calculate the new relative humidity offset with: RH_Offset_New = RH_Offset_As_Found - RH_Average_Error.
10. To update the temperature and relative humidity offsets, access the Probe Calibration Screen. Simultaneously hold **NEXT** and **EXIT** down for 4 seconds. The offset that can be changed in this screen is blinking. Push **up** and **down** to change the value of the blinking characters and store the new offset. Push **NEXT** to move to the other offset field. Push **up** and **down** to change the value of the blinking characters and store the new offset for that field.
11. Push and hold **EXIT** for 4 seconds to return to the main screen.

As Left Data Collection

If it is not necessary to enter new temperature and humidity offsets into the UUT, the calibration is complete. If temperature and humidity offsets were changed per the *Load Temperature and Humidity Offsets into the Product* section, then use the steps in the As Found Data Collection section to take As Left data.

Temperature Uniformity Verification

The temperature uniformity verification uses the temperature data collected when measuring each of the set points in Table 11. It compares each of the 8 temperature probes against the average of the 8 probes. Temperature uniformity at each of the 8 measurement points is defined as absolute maximum of Tx – T_average, where x refers to one of the 8 probes. Each of the 8 probes must read within ±0.12 °C of T_average.

Troubleshooting

See Table 12 for possible causes and solutions to common problems.

Table 12. Troubleshooting

Problem	Possible Cause	Solution
Check Desiccant indicator is lit with a non-saturated desiccant cartridge. Display has the message LO RH ERR.	Product setting is at a temperature and/or humidity extreme relative to the prior setting such that transition times are longer than normal.	Monitor the Product to see that the actual humidity is still dropping. If it is, the **Check Desiccant** indictor will eventually turn off unless the Product setting is beyond its specifications.
	There may be condensation in the chamber.	Monitor the Product to see that the actual humidity is still dropping. If it is not, there is likely condensation in the chamber. Turn the Product off and check for condensation. See **Remove Condensation**.
	There is a leak in the system.	Check that the door is properly seated, and tightened against the Product front panel. Check that all ports are sealed properly.
Check Water indicator is lit with the water at the proper level. Display has the message HI RH ERR.	Product setting is at a temperature and/or humidity extreme relative to the prior setting such that transition times are longer than normal.	Monitor the Product to see that the actual humidity is still moving up. If it is, the **Check Water** indictor will eventually turn off unless the Product setting is beyond its specifications.
	There may be condensation in the chamber.	Monitor the Product to see that the actual humidity is still moving up. If it is not, there is likely condensation in the chamber. Turn the Product off and check for condensation. See **Remove Condensation**.
	There is a leak in the system.	Check that the door is properly seated, and tightened against the Product front panel. Check that all ports are sealed properly.
Actual humidity is much higher than the set point. For example, the set point is 23 °C, 45 % RH and the Actual is 23 °C with RH staying close to 80 %.	Water has condensed inside the chamber.	Shut off power. Remove the door and inner chamber (mixing insert) and look for water inside the outer chamber, mixing insert, door, and UUT. Wipe dry with a clean paper towel and reinstall the inner chamber and door.

Problem	Possible Cause	Solution
Cannot reach the very low humidity levels, for example 7 %. **Check Desiccant** indicator on front panel may be on.	Desiccant cartridge needs to be replaced.	Shut off power, open the desiccant cartridge. Inspect. Replace if the normally blue cartridge material is pink.
	Door not properly sealed, causing a leak.	Tighten door.
	UUTs are not adequately sealed within its port.	Check to see that the appropriate grommet is used, and/or add sealant material around the UUT probe. Parafilm, Scotch Removable Adhesive Putty or like material works well.
	If using a chilled mirror with an external pump and not returning the gas sample back to the Product, you may be drawing too much gas from the Product.	Turn down the pump setting.
"HEATING" stays on longer than usual at power-up.	The internal humidity generator may be overfilled.	Shut off power. Drain excess water using the drain outlet on the back of the Product until water level is between Max and Min with the Product in Standby or turned off.

Error Messages

The product has Error Messages that show information during general use of the Product. Error Messages are not necessarily related to the Error Codes that follow this section. The latter indicates an internal failure that requires servicing of the Product. Error messages are shown in Table 13.

Table 13. Error Messages

Error Message	Description
Caution	At high humidity settings, when the actual chamber temperature is within 2 °C of the actual chamber dew point, CAUTION appears to warn of possible condensation conditions if subsequent settings are lower in temperature.
HI RH ERR	Usually associated with the Check Water indicator. Causes include a low water and condensation in the system. See *Troubleshooting* for more details.
LO RH ERR	Usually associated with the Check Desiccant indicator. Causes include a saturated desiccant and condensation within the system. See *Troubleshooting* for more details.

Error Codes

If the Product detects an internal failure, the display shows "FATALERR". To determine the specific fault, push and hold down **NEXT** and **EXIT** simultaneously until the error code screen appears. The list of error codes is in Table 14.

Table 14. Error Codes

Error Code	Description
"No Analog Detected"	Internal Hardware fault.
"Internal Probe Fail"	Internal hardware fault.
"No Peltier Temp"	Internal over temperature probe fault, fans will run continuously.
"No HumGen Temp"	Internal temperature probe failure.
"Peltier High Limit"	Internal cooling sensor is above limit.
"HumGen Low Limit"	Ambient temperature of humidity generator is below operating temperature.
"HumGen High Limit"	Humidity generator is above allowed limit. Check water supply or ambient conditions.
"EEPROM Cfg Reset"	Unit has reset its configuration to factory default, review settings.
"EEPROM Cal Reset"	Factory calibration has been reset to default. Please contact Fluke Calibration.

User-Replaceable Parts and Accessories

Table 15 lists the part numbers of each user-replaceable part or accessory for the Product. For more information on these items and accessories, refer to *Contact Fluke Calibration*.

Table 15. User-Replaceable Parts and Accessories

Description	Fluke Calibration Part Number	Total Quantity
Mains Power Cord - North American	284174	1
Mains Power Cord - Europe	769422	1
Mains Power Cord - UK	769455	1
Mains Power Cord - Swiss	769448	1
Mains Power Cord - Australia	658641	1
Mains Power Cord - South Africa	782771	1
Mains Power Cord - Thailand	4362094	1
Mains Power Cord - Denmark	2477031	1
Mains Power Cord - Brazil	3841347	1
5128A Safety Information	4758293	1
⚠ FUSE 5 x 20 mm 4 Amp (F4A 250V) Fast Blow	3712591	2
⚠ FUSE 12 V dc output fuse (F1A 250V fuse).	3712540	1
Desiccant cartridge	4791251	1
Grommet kit and fill syringe	4791297	1
Square door with 5 ports	4791272	1
Accessories		
Round door with 5 ports	4791260	1
Clear door with internal shelf	4791285	1

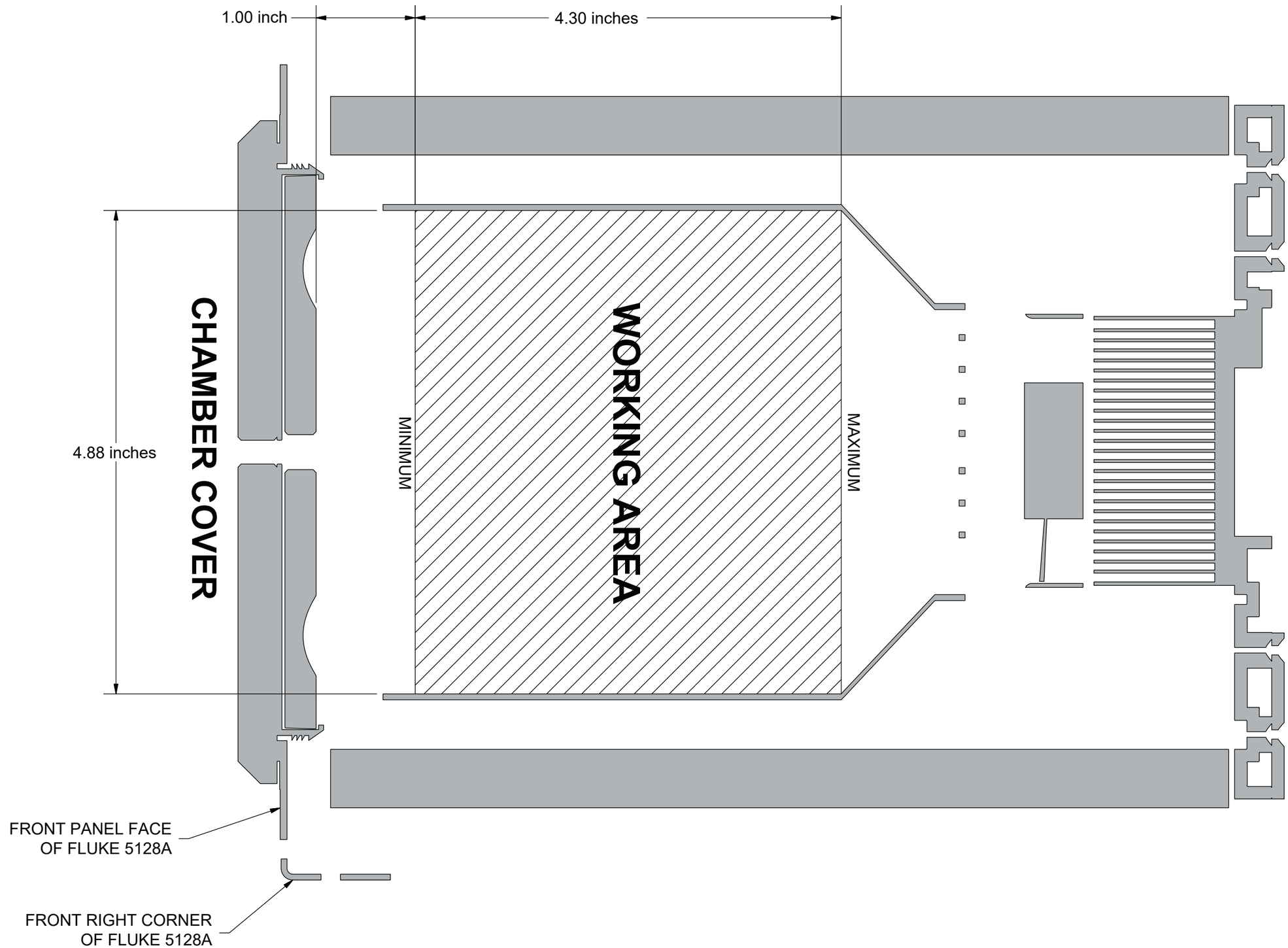

Figure 11. Working Volume Template